Meridian 1

NORTEL
NORTHERN TELECOM

SEMINARIO TECNICO DE CTAS

Libro 3 de 3

Instructores: Adrian Benedict
William Rodriguez
Jose Ubilla

27 de Octubre a 7 de Nov. 97

RELEASE 23 GLOBAL TECHNOLOGY TRANSFER

January 30 & 31, 1997

BRINGING THE WORLD TOGETHER THROUGH COMMUNICATIONS
NORTEL Mission Park

PROPRIETARY INFORMATION

IODU-C Software

IDOU/C Software Components

Database Transfer Utility

Prior to upgrading the IOP/CMDU on a THOR system to IODU/C, this software enables the database that is on the CMDU hard disk to be transferred onto IODU/C compatible 2MB diskette(s). The database on the 2MB diskette(s) can then be installed or restored onto the IODU/C hard disk.[1]

The Database Transfer Utility software comes on a single 4MB diskette. However, as it is processor type specific, each processor type must use the corresponding Database Transfer Utility diskette.

1. This software can also be used to transfer Omega database that exists on 4MB diskette onto a THOR CMDU hard disk, and then be transferred onto IODU/C compatible 2MB diskettes.

Install

- This software is very similar to the Install software that comes with the existing M1 software set for THOR systems that uses CMDU. It is used to install the M1 software and/or database onto M1.

- The IODU/C Install software comes on a single 2MB diskette. However, as it is processor type specific, each processor type must use the corresponding Install diskette.

Keycode

- This is a encripted file that, along with the security device on the IODU/C card, unlocks the M1 software, feature sets and ISM limits. A "keycode diskette" refers to a diskette that contains a keycode file.

CD-ROM

- The CD-ROM is the media that contains the entire M1 software. At software installation time, the appropriate M1 software is loaded into the system base on the keycode.

Software Installation

Keycode installation

This new function only applies for IODU/C equipped systems.

After the Install software has been loaded, in order to bring up the software installation main menu, you will be promted to insert the keycode diskette into the IODU/C floppy drive. The keycode will permit the system to determine what software is to be installed (e.g. CP1, CP2, CP3).

Software installation from CD-ROM

This new function only applies for IODUC equipped systems. For IOP/CMDU system, the software will continue to be installed from floppy as before.

Software installation from CD-ROM is similar to the existing IOP/CMDU software; however, now the system will install the appropriate software from the CD-ROM base on the keycode specification (e.g. CP1, CP2, CP3).

Customer database installation

- This existing function applies to both IOP/CMDU and IODU/C equipped systems. The main difference between the two is that the customer database must be on a 2MB diskette for IODU/C verses 4MB diskette for IOP/CMDU.

Copy software from the redundant core

This new function is supported for both IOP/CMDU and IODU/C equipped systems.

After a new software has been installed onto one core, this function allows the software to be easily installed on the redundant core by directly copying over the software.

Copy database from the redundant core

- This new functions is supported for both IOP/CMDU as well as IODU/C equipped systems.

After the customer database has been installed onto one core, this function allows the customer database to be easily installed on the redundant core by directly copying over the database.

Changing Feature Sets/ISM Limits

- Previously, feature set and/or ISM limit changes requires customized software to be installed and then sysloaded. With IODU/C, there is no need for the time consuming software installation process. Instead, a new keycode is entered via LD143 followed by a sysload, and the customer is updated with the new feature sets/ISM limits.

Maintenance & Diagnostic

Overlay 137

- DATA CMDU n

  This existing diagnostic command has been modified to perform CD-ROM read test if the specified input/output pack is an IODU/C card.

- DATA CMDU n CD

  This new command only applies to IODU/C equipped systems. The command is used to perform a CD-ROM read test (as appose to a read test on the entire IODU/C) on the specified IODU/C pack.

- SDID

  This new command only applies to IODU/C equipped system. The command is used to show the security device's ID.

- STAT

  This existing command has been modified to print the following input/output device status:

Database Backup/Restore Components

LD43

The following changes to the existing LD43 commands are supported for both IOP/CMDU and IODU/C equipped systems.

- BKO

  This existing command has been modified so that during database backup, if the database is found to be too large to fit onto one floppy diskette, the database will be compressed before it is stored onto the diskette.

  If the compressed database cannot be stored onto one floppy

diskette, then:

- For a single CPU system, this error condition will be flagged.
- For a dual CPU system, the database will overflow onto the diskette in the inactive floppy drive. If the compressed database fails to be stored onto two diskettes, the error condition will be flagged.

Once database backup error has been flagged, an SRPT4621 warning message will be given on the TTY every time someone logs onto the M1. This message is only cleared when a attended database backup (LD143, ABKO) is successfully done.

- EDD

Once the database has been stored onto the hard disk, the EDD command will automatically backup the database from the hard disk onto floppy. Therefore, previous description of the BKO command applies toward EDD database backup to diskette as well.

LD143

The following new commands are supported for both IOP/CMDU and IODU/C equipped systems.

- ABKO (attended database backup)

  Similar to its counter part LD43 BKO, this command backs up database from hard disk onto floppy. However, ABKO will backup database without any compression. A projected number of needed floppy will be given at the start of ABKO. If more than one floppy is needed, you will be prompted to insert the next floppy at the appropriate time.

- ARES (attended database restore)

  Similar to its counter part LD143 RES, this command

restorestores database from floppy to hard disk. If the database spans more that one floppy, you will be prompted to insert the next floppy at the appropriate time.

Keycode Management

LD143

All the new keycode management commands only applies to IODU/C equipped systems.

There are certain keycode management commands that requires trailing parameter(s). Table 1 contains the various parameter keywords and their descriptions.

Table 1: Keycode Parameter Keywords

Parameter Keyword	Description
REC	This refers to the "active" keycode.

Table 1: Keycode Parameter Keywords

Parameter Keyword	Description
NEW	This refers to the "pending" keycode -- once sysload takes place this keycode will become the active keycode.
OLD	This refers to the "last active" keycode.
FD0	This refers to the the keycode on the keycode diskette in floppy drive 0.
FD1	This refers to the the keycode on the keycode diskette in floppy drive 1.
HD	This refers to the keycode on the active hard disk.

- HELP

This command gives a brief description of all the keycode

management commands in LD143.

- KDIFF *parm1 parm2*

  This command allows the viewing of the differences between the two keycodes.

- KMAN

  This command allows manual line-by-line entry of a keycode. Each line of entry must contain 16 characters. The keycode is then saved onto the hard disk with an option to back up to floppy.

  To activate the keycode, the KNEW HD command must be entered followed by a sysload.

- KNEW *parm1*

  This command allows the user to select a keycode to become the pending keycode. The pending keycode will become the active keycode upon sysload.

- KOUT

  This command cancels the KNEW or the KRVR command so that the current active keycode will remain in control upon sysload.

- KRVR

  This command reverts the last active keycode to be the pending keycode. This command does the samething as KNEW OLD. The pending keycode will become the active keycode upon

sysload.

- KSHO *parm1*

  This command is used to display the content of a keycode.

- KSTT

  This command is used to list all the keycodes, including REC, NEW, OLD, F0, F1, HD.

- KUPL

  This command is used when a PC has modem access to the M1 and wishes to use copy-and-past to enter a keycode into the M1. Once the keycode has been uploaded, the keycode is saved onto the hard disk with an option to back up to floppy.

To activate the keycode, the KNEW HD command must be entered followed by a sysload.

Other Affected Components

- Changes have been made to the existing database administration overlays to indicate the number of diskettes needed for database backup to floppy.

```
MEM AVAIL: (U/P): 10426149    USED: 288986    TOT: 10715135
DISK SPACE NEEDED: 98 KBYTES
2MB BACKUP DISKETTE(S) NEEDED: 1  (PROJECTED)
4MB BACKUP DISKETTE(S) NEEDED: 1  (PROJECTED)
```

This change applies to the following overlays:

10	11	12	13	14	15	16	18	19
22	23	24	25	26	27	28	49	52
56	57	58	74	79	81	84	85	86

87 88 90 93 94 95 97

Feature Interactions

- None.

Feature Configuration Procedures

- None.

Release 23 Technical Transfer

- Meridian 1 Core -

Presenter

ALFREDO CARRION CTS Manager, CALA

Agenda

NORTEL
NORTHERN TELECOM

- Release 23 Upgrades
- CP3
- IODU/C
- Questions and Answers
- Demonstrations

R23 Upgrades

NORTEL
NORTHERN TELECOM

System	Last Software Release Supported
STE, RT, NT XT, 11E, 21E, 51, 61, 71	X11 R21
11	X11 R18
ST, 21	X11 R17
XN	X11 R14
MS, N	X11 R13
S	X11 R12
LE, VLE, XL	X11 R9
M	X11 R7
L, VL, A	X05

X11 R23

11C, 51C, 61C, 81, 81C

R23 Upgrades

NORTEL
NORTHERN TELECOM

Software generic represents the combination of machine type, processor type, and feature set supported on a given release

Generic	Release 18	Release 19	Release 20	Release 21	Release 22	Release 23
1611	Opt 81 - 68030					
1611				Opt 81C- 68030		
1711			Opt 51C-68030			
1811		Opt 61C-68030				
1911				Opt 81/81C - 68040		
2111					Opt 11C - 68040	
2211					Opt 51C - 68040	
2311					Opt 61C - 68040	
2411						Opt 51C - 68060
2511						Opt 61C - 68060
2611						Opt 81/81C - 68060

R23 Upgrades

NORTEL
NORTHERN TELECOM

System Supported Release 15 - 17

- Option 11 (>R15)
- Option 21A
- Option 51
- Option 61
- Option 71
- SL-1 ST, RT, NT, XT

System Supported Release 18 - 21

- Option 11 (<R19)
- Option 11E (>R18)
- Opt 21E/STE
- Option 51
- Option 51C (>R19)
- Option 61
- Option 61C (>R18)
- Option 71
- Option 81
- Option 81C (>R20)
- SL-1 ST, RT, NT, XT

Systems Supported Release 22 - 23

- Options 11C, 51C, 61C, 81 and 81C

R23 Upgrades

NORTEL
NORTHERN TELECOM

Software Updates

Module Additions

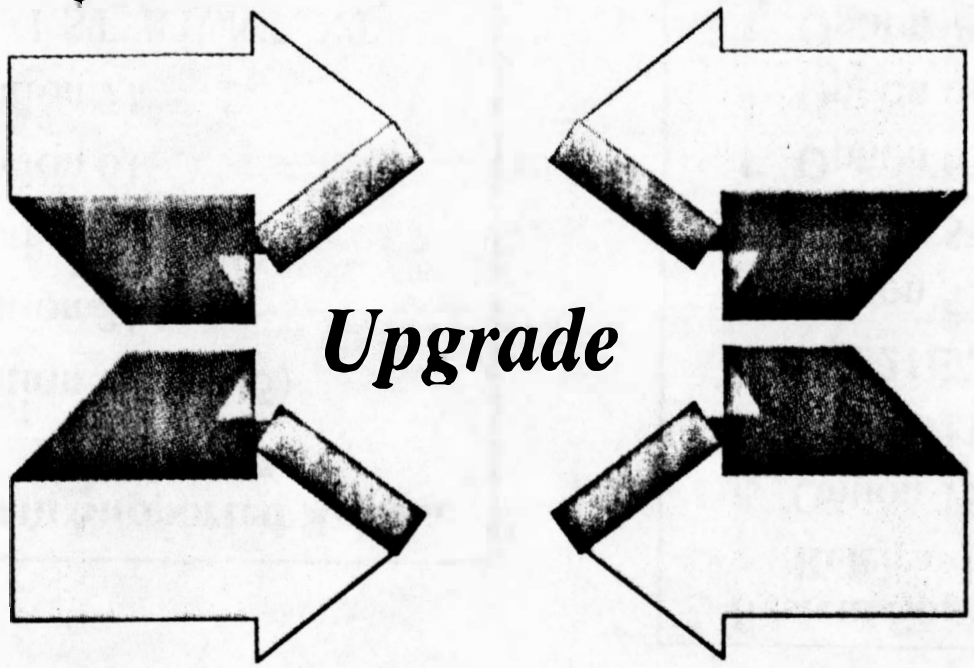

Card Level/SIMMs Replacements

Card Cage Exchanges

NORTEL
NORTHERN TELECOM

Software Update

- **Replace software cartridge or diskette(s) to add feature(s) and/or update release**
- **For example: Option 61C Release 22 to 23**
- **Approximately 2 hours**
  - Data dump
  - Install new software & customer database

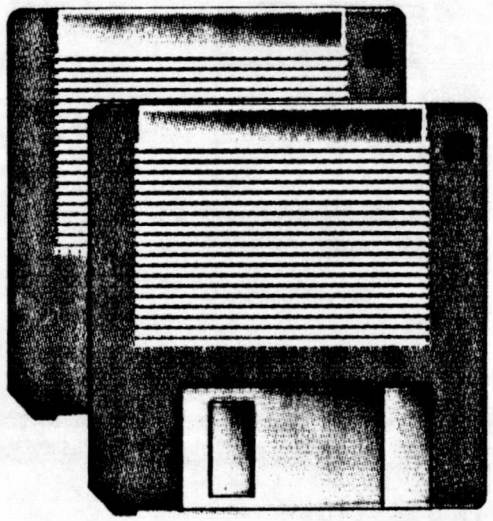

NORTEL
NORTHERN TELECOM

Card / SIMMs Replacement

- Replace selected common equipment cards
  - CPU, Memory, SIMMs, ROM, Disk Drives
- No impact to other equipment
  - Network, peripherals, etc.
- Examples:
  - Option 11E to 11C
  - 68030 to 68060 processor
- Approximately 2 hours
  - Data dump
  - Hardware replacement
  - Install new software & customer database
  - Sysload

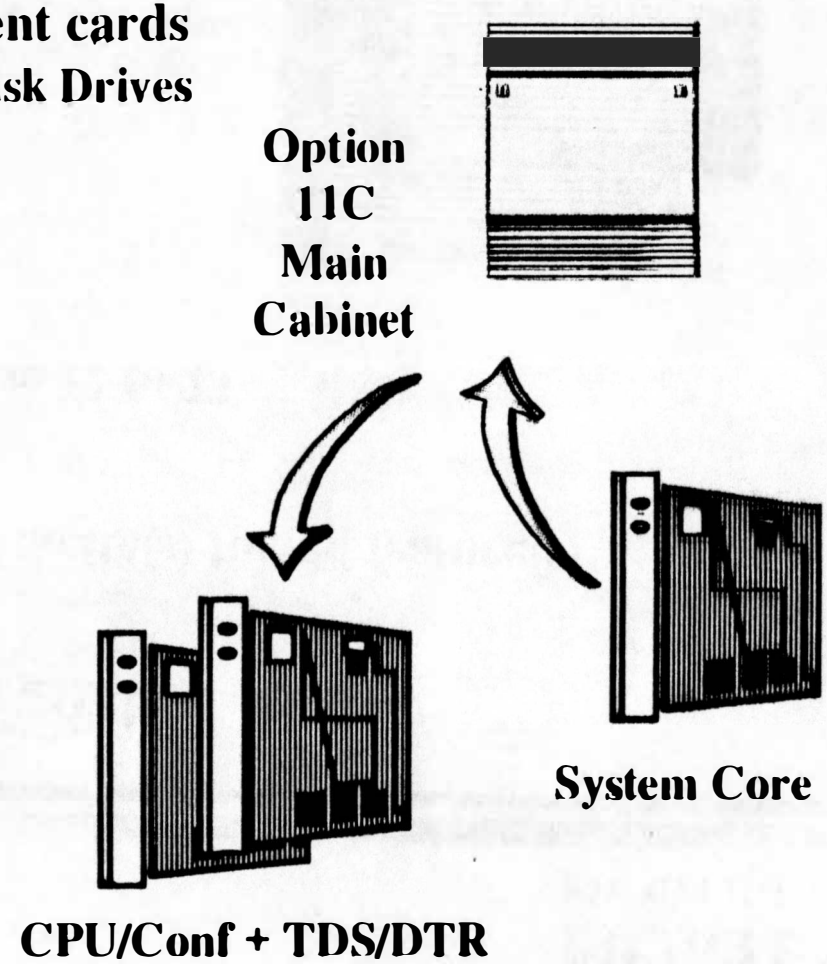

NORTEL
NORTHERN TELECOM

Card Cage Exchange

- **Replace card cage, including backplane bus and install new common equipment cards**
- **No impact to other equipment**
  - Network, Peripherals, etc.
- **No incremental DC power equipment and extra floor space required**
- **Available for**
  - 21 to 51C
  - 61 to 61C
  - 71 to 81C
  - 81 to 81C

  imately 3 hours

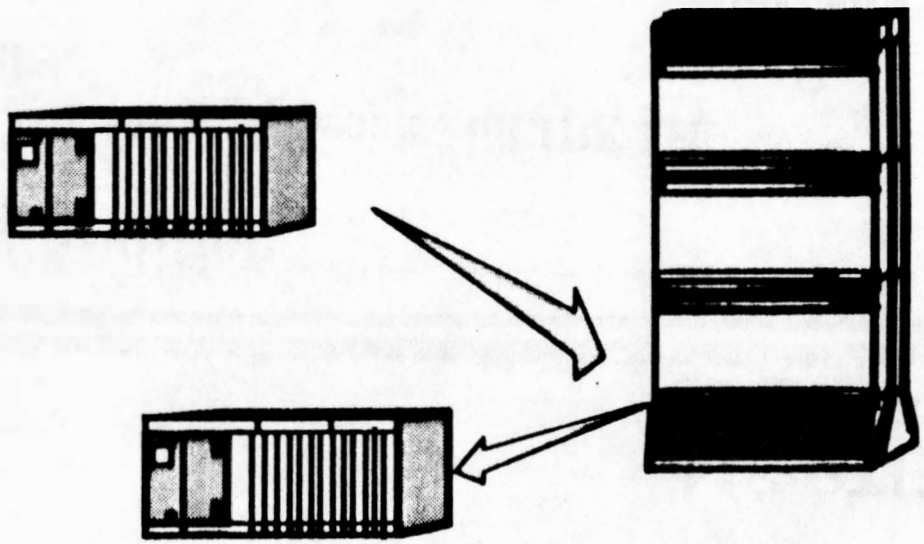

NORTEL
NORTHERN TELECOM

Module Addition

- **Modules containing power, common, network and IPE are placed next to existing cabinet**
  - New CE and network cards replace those previously housed in cabinet
- **Existing PE cards re-used**
  - Network cables are extended from module to PE buffers to reconnect existing PE cards
- **Grow with IPE cards**
- **DC power added if required**
- **For example XT to Option 81C**
- **Approximately 5 hours**

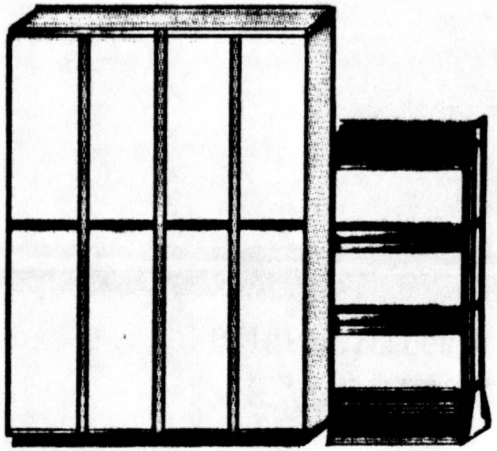

NORTEL
NORTHERN TELECOM

Glossary

Call Processors supported on Rls 23 software:

CP1 - 68030 Call Processor (NT6D66)

CP2 - 68040 Call Processor (NT9D19)

CP3 - 68060 Call Processor (NT5D10)

NORTEL
NORTHERN TELECOM

CP3 Feature Description

- Motorola 68060 based Call Processor.
- Average 1.35 times real-time capacity increase over 68040 Call Processor.
- 2 times real-time capacity increase over 68030 Call Processor.
- Compatible with Options 51C, 61C, 81 and 81C.
- All functionality and maintenance identical to 68040 Call Processor.
- Memory configuration (FLASH, DRAM & SRAM) identical to CP2.
  - » DRAM - Dynamic Random Access Memory used for SL-1 database, OS data and patches.
  - » SRAM - Static Random Access Memory for system memory management tables and the SL-1 stack (CP2 & CP3) and processor cache on the C biblioteca.
  - » FLASH - Read-only memory used for software load

NORTEL
NORTHERN TELECOM

CoreNet Architecture

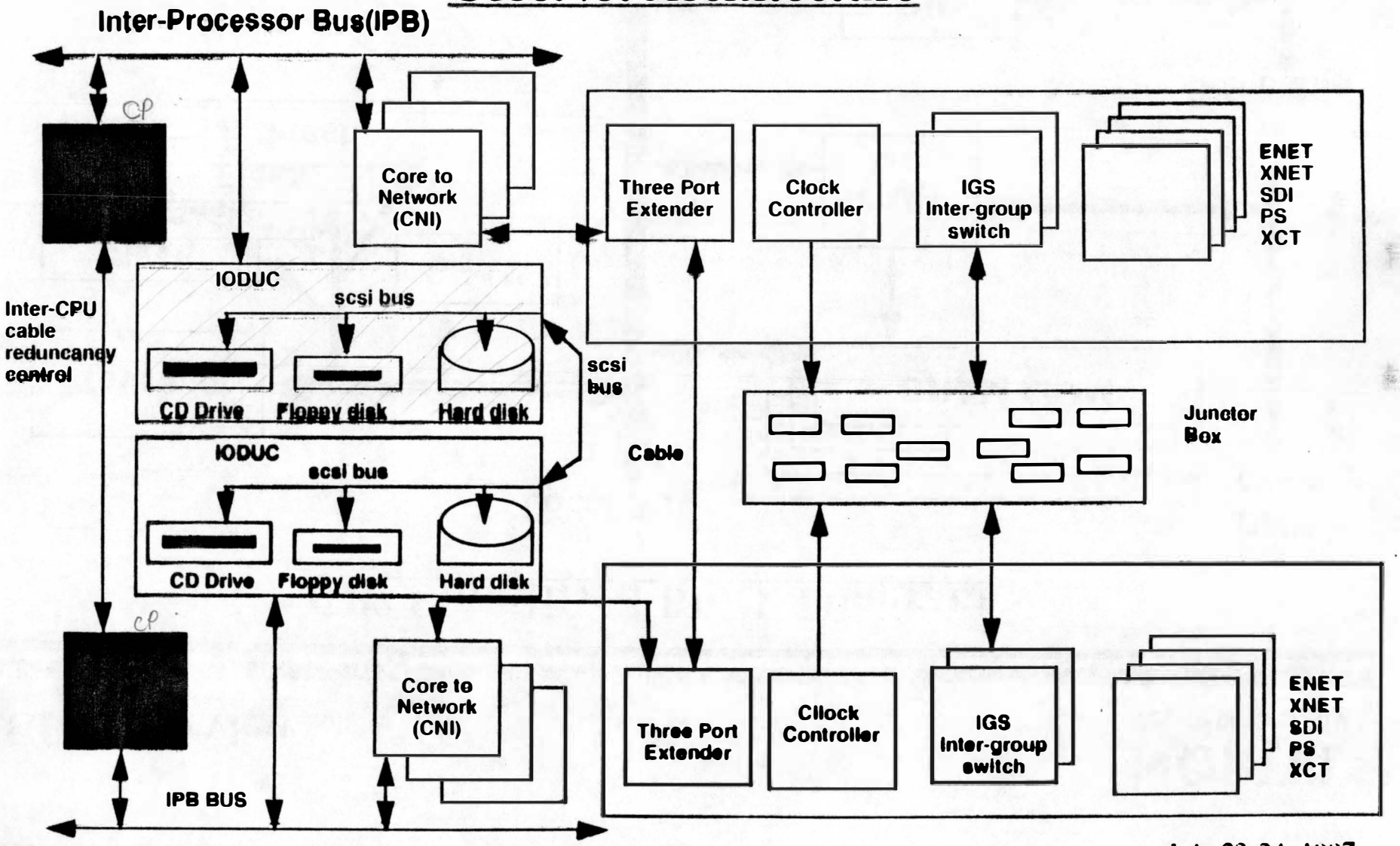

NORTEL
NORTHERN TELECOM

CP3 Simplified Block Diagram

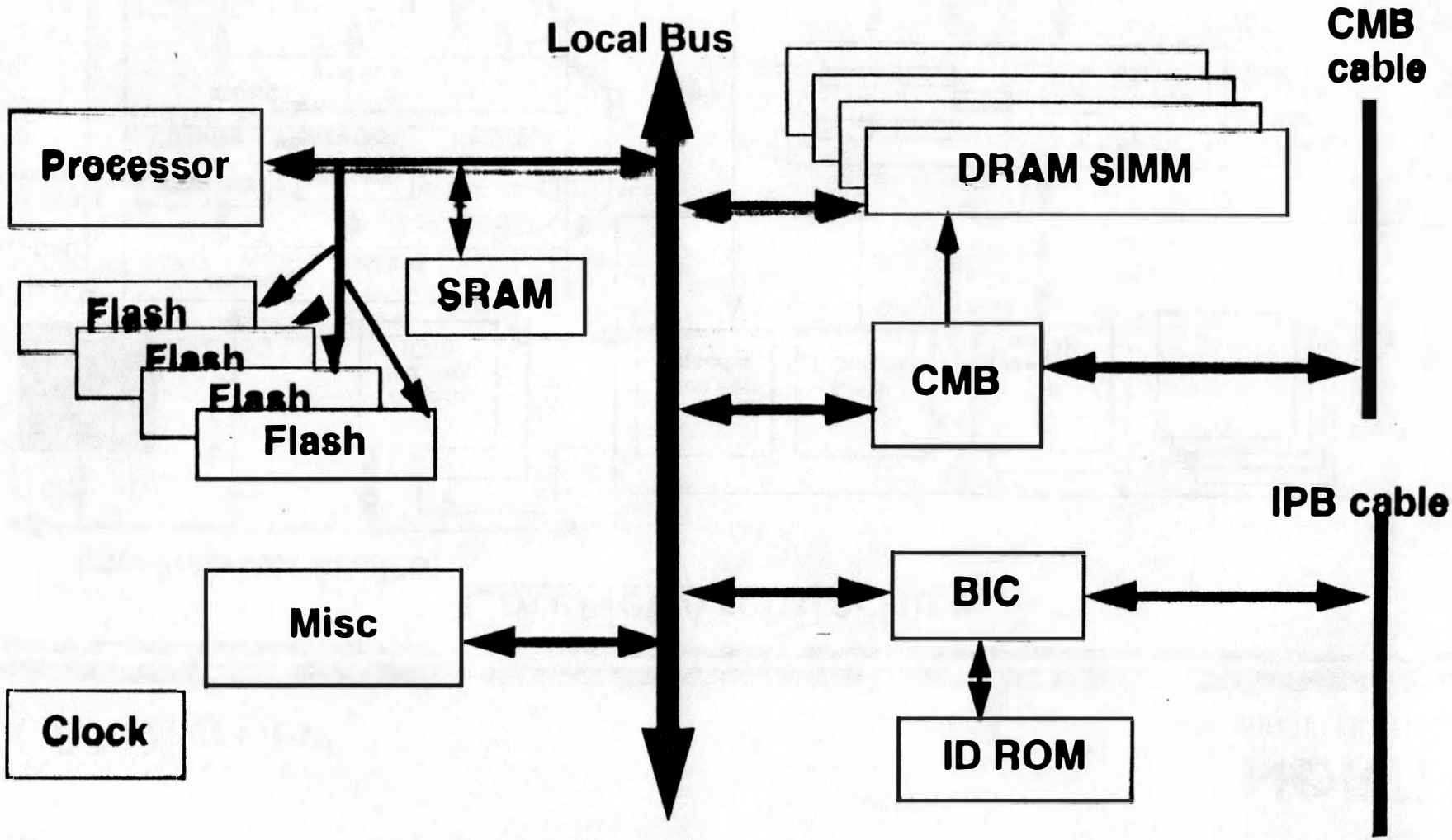

NORTEL
NORTHERN TELECOM

Memory

- **FLASH - Read-only memory used for softward load**
- **DRAM - Dynamic Random Access Memory used for SL1 data base, OS data and patches**
- **SRAM - Static Random Access Memory for system memory managament tables and SL-1 stack (CP2 & CP3) and processor cache on the CP1**

NORTEL
NORTHERN TELECOM

CP3 Memory Configurations

- FLASH: Program Store 32 or 64 MB
- DRAM: Data Store 16, 32 or 48 MB

NT Code	Total Mem	FLASH	DRAM
NT5D10AA	48	32	16
NT5D10CA	64	32	32
NT5D10EA	80	32	48
NT5D10HA	96	64	32
NT5D10JA	112	64	48

- NTZR21XX DRAM Field Upgrade Kit (two 16 mb SIMMS to upgrade DRAM)
- No FLASH upgrades are supported in the field (pre installed boot code on FLASH)

NORTEL
NORTHERN TELECOM

CP3 Software Overview

- Release 23 is upgraded from VxWorks 5.1.1 to VxWorks 5.2.
- VxWorks 5.2 libraries are required for 68060 support.
- Introduces a new version of VxWorks OS to all C-processors (including Option 11C)
- CP1, CP2 and CP3 will include semi-dynamic allocation of memory (based on available DRAM).

NORTEL
NORTHERN TELECOM

CP3 Tools

- All supported tools environments have been upgraded to VxWorks 5.2.
- No Patch compatibility between CP1, CP2 and CP3. Patches must be generated for the specific machines types used by CP3.
- Patcher has been updated to prompt for and check processor types

NORTEL
NORTHERN TELECOM

Agenda

- General Overview
- Process Overview
- Hardware Overview
- Database Transfer to IODU/C
- Software Overview
- Questions & Answers

Glossary:

- IODU/C - NT5D61 - Input Output Disk Unit with CD ROM
- IOP/CMDU - NT5D20 - also known as IODU
- IOP and CMDU - separate cards - NT6D63 and NT6D64

IODU/C General Overview

NORTEL
NORTHERN TELECOM

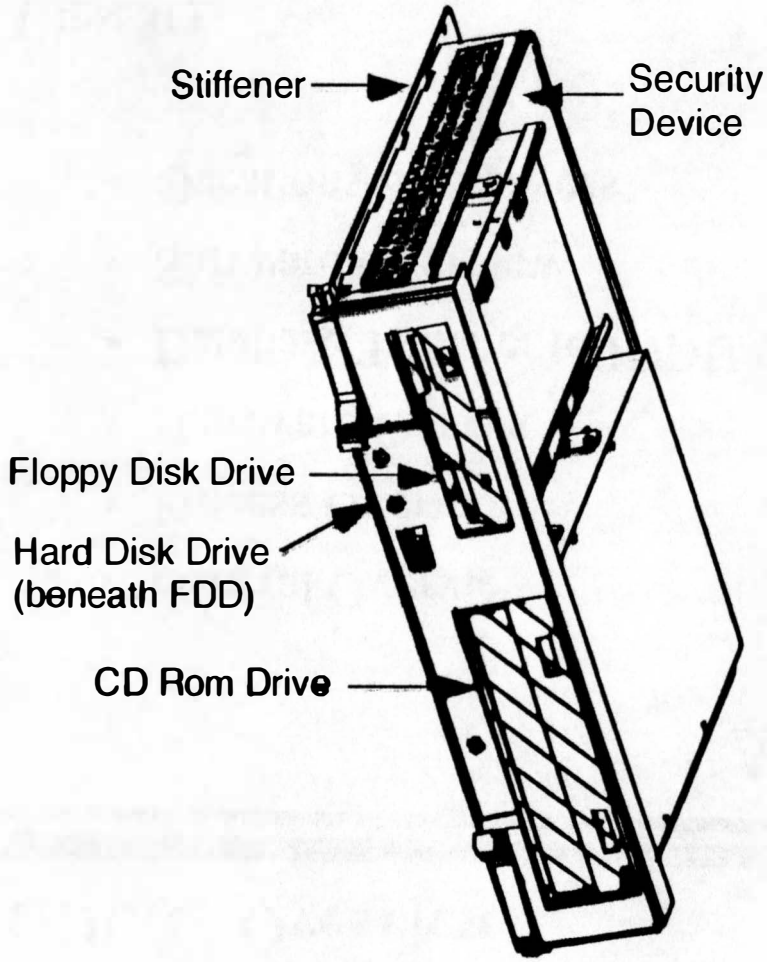

Identification: NT5D61

IODU/C Hardware features:

- 2MB Floppy Drive(FD)
- Security Device
  - Dallas Semiconductor DS1982U
  - replaced Security Cartridge
- Industry Standard CD-ROM(CD)
- Industry Standard Hard Disk (HD)

IODU/C retained IOP/CMDU features:

- SCSI-1 Controller
- Ethernet Controller
- MC68020 processor and memory
- CP-IOP interface

Software Generics on X11 Rls 23

System	CP1	CP2	CP3
51C	1711	2211	2411
61C	1811	2311	2511
81/81C	1611	1911	2611

Use of pkg 298/299 for Option 81/81C remains the same:

- 298 indicates Option 81
- 299 indicates Option 81C

NORTEL
NORTHERN TELECOM

Benefits of IODU/C

IODU/C Specific Features (not available on IOP/CMDU):

- Keycode activation of Software Packages & ISM limits
- Software Installation via CD ROM
- System software copy from redundant side (CP2/CP3)
- Archive / Restore functionality changes

Features propagated to IOP/CMDU (on Release 23):

- Archive / Restore functionality changes

NORTEL
NORTHERN TELECOM

When is IODU/C Required?

IODU/C is required on:

- All New Systems
- All System Upgrades from Omega to Thor
- System Upgrades to Option 81C, when existing system has separate IOP and CMDU
  - example: Option 81 to 81C

IOP/CMDU continues to be supported on:

- System Upgrades from Thor to Thor (ie. 51C to 61C; and 61C to 81C)
- Software ("only") upgrades to Release 23

IOP/CDMU based systems on Release 23 may upgrade to IODU/C

NORTEL
NORTHERN TELECOM

IODU/C Engineering Rules

- IODU/C is supported on Release 23 and subsequent Releases
- One IODU/C is required per Core
- IODU/C may not be mixed with IOP/CMDU

Software Install Kit Contents

- **CD ROM (1) - generic**
  - Contains all 9 generics for a given Release and Issue of software
- **Install Program Diskettes (3) - generic**
  - Each 2MB diskette support software installation for one processor type (68030, 68040, 68060)
- **Database Transfer Utility Diskettes (3) - generic**
  - Each 4MB diskette supports database transfer to 2MB floppies for one processor type (68030, 68040, 68060)
- **Database diskettes (4)**
  - same as those provided today, except 2MB capacity
- **Keycode Download Utility (1) - Windows 95**
  - Supports download of keycode from keycode server, plus other keycode functionalities
- **Keycode diskette (1)**
  - Left blank in merchandise kit

- **Security devices (1 or 2)**
  - May be packaged within software install kit, but is not part of the "structure" of the software install kit. External label on packaging identifies when software install kit contains security device.

NORTEL
NORTHERN TELECOM

What is a Security Device?

- Dallas Semiconductor - DS1982U - Customized for Nortel
- One security device mounted onto each IODU/C. Tested by IOP self test
- Never replaced
- Validates keycodes to provide software feature / ISM limit functionality
- Field Insertable / Detachable
- Delivery:
  - Produced and delivered as part of the software order
  - Exceptions:
    - Factory installed into IODU/C on New Systems orders
    - Factory installed into IODU/C on System Upgrade orders if software is included in the order.
- Contents viewable by means of SDID command (in OVL 137)

NORTEL
NORTHERN TELECOM

What is a Keycode?

- ASCII string of ~336 characters.
- Encodes authorization to use a specific:
  - Release and Issue of software
  - Software Generic (based on System type and CP type)
  - Set of feature packages and ISM limits
- Validated against system security device(s)
  - During Install and at Sysload
- Generated per Customer Order
- Delivery Methods:
  - Direct shipment from Nortel software manufacturing (always):
    - floppy diskette
    - hardcopy acknowledgment
  - Download from Keycode Server (optional):
    - Using Keycode Download Utility (Windows 95)
    - Held within "current" database for 45 days
    - Historical (regenerated) keycodes available thereafter

IODU/C Process Overview

NORTEL
NORTHERN TELECOM

IODU/C Order Process

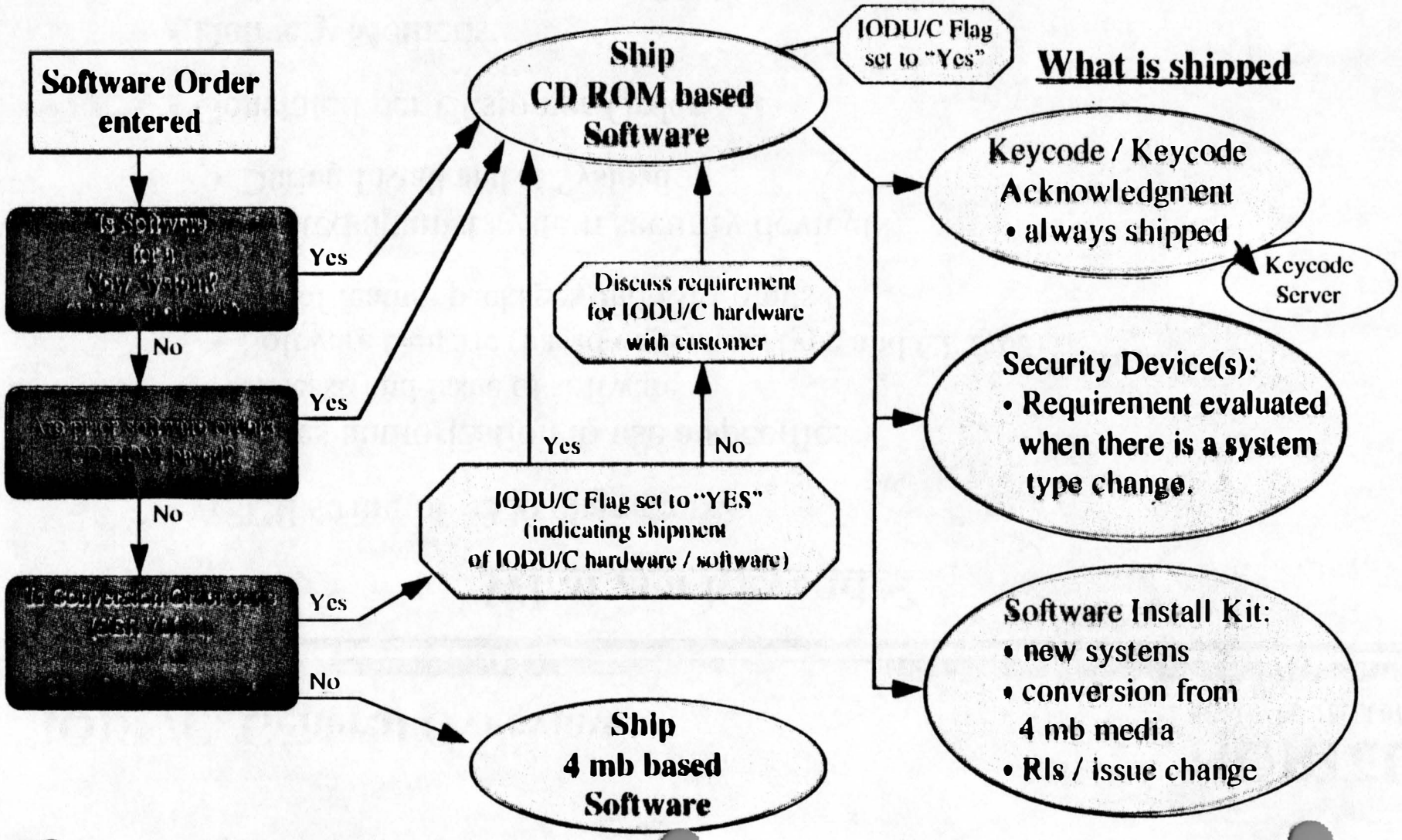

IODU/C Process Overview

NORTEL
NORTHERN TELECOM

Keycode Delivery Processes

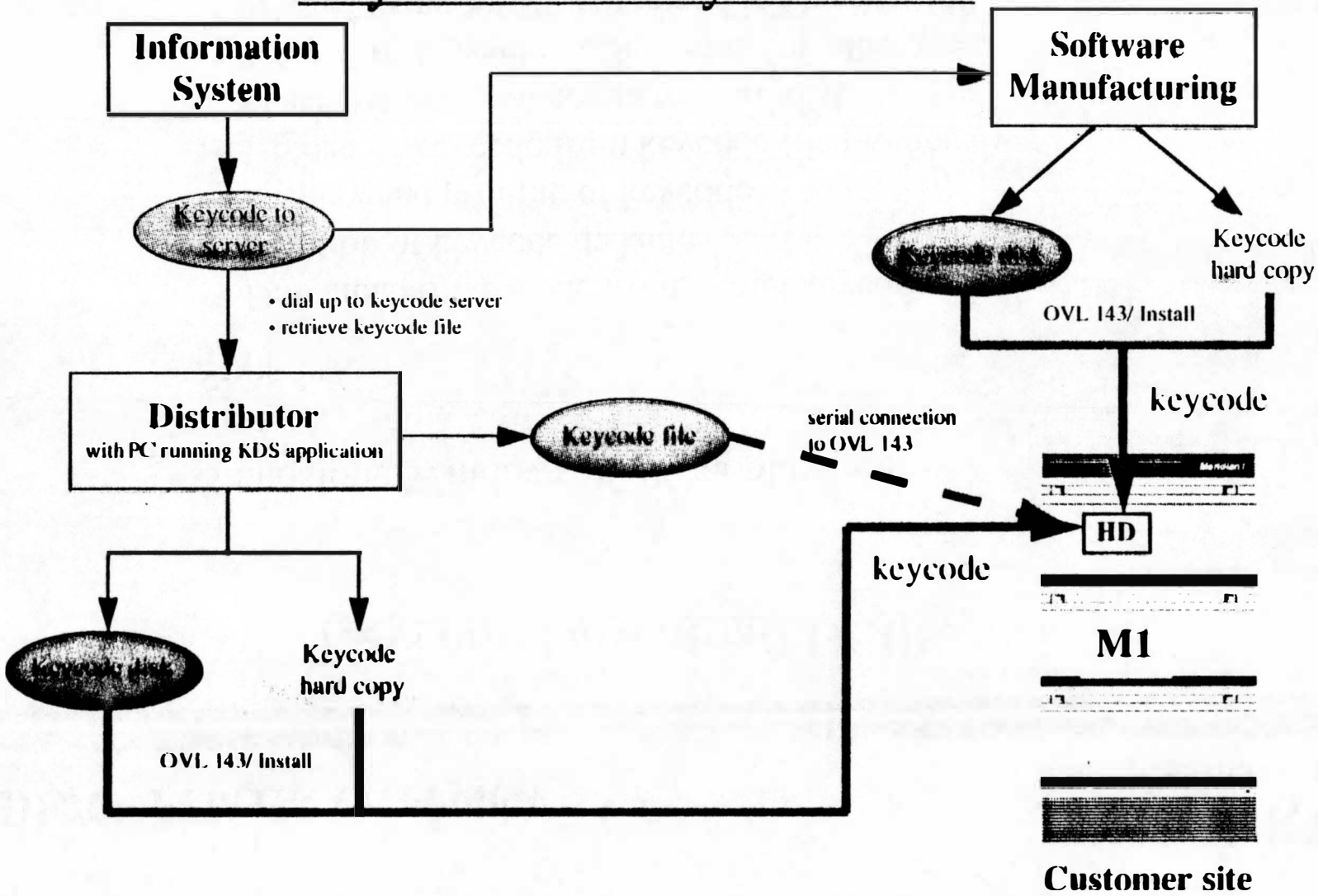

NORTEL
NORTHERN TELECOM

Keycode Download Utility

- Standalone Windows 95 PC application
- Supports:
  - Download of keycode from Nortel keycode server
  - Creation of keycode diskette
  - Display and printing of keycode
  - Upload of keycode from keycode file previously placed on personal computer hard disk
  - "Copy" of keycode to clipboard, for subsequent "Paste" using KUPL command in Overlay 143

NORTEL
NORTHERN TELECOM

Electronic Transfer of Keycode

Electronic transfer of keycode from distributor PC to Meridian 1 is support via FTP transfer.

Process steps:

- Logon to target machine (via modem)
- Execute KUPL command within Overlay 143
- "Copy" keycode using Keycode Download Utility
- Return to OVL 143; invoke "Paste"
- Keycode is validated (via checksum) and accepted as a keycode candidate, or an error message is generated. A validated keycode is stored in location: /u/keycode
- Execution of the KNEW command is necessary to activate keycode at the next sysload

IODU/C Hardware Overview

NORTEL
NORTHERN TELECOM

IODU/C Block Diagram

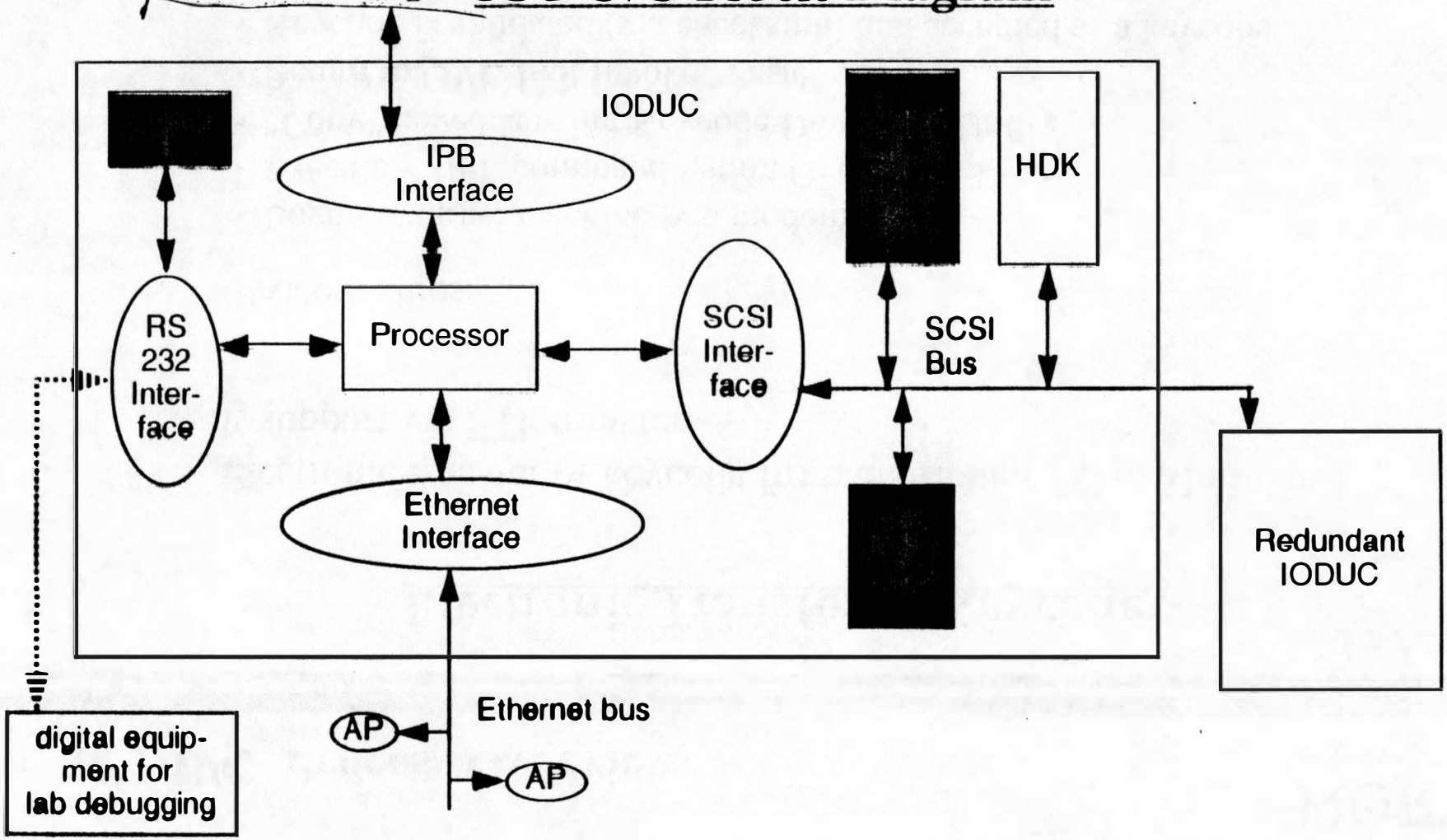

NORTEL
NORTHERN TELECOM

IODU/C Main Functions

- Provide SCSI interface to on board HDK, FDD, CD drives and to redundant drives on a redundant IODUC
- Provide hardware support for Ethernet
- Provide Dongle for S/W authentication
- Provide RS232 industry standard port for s/w debugging& maintenance

NORTEL
NORTHERN TELECOM

What are the three disk drives?

- CD ROM for SW distribution
- Hard disk for sysload
- Floppy drive for archive

NORTEL
NORTHERN TELECOM

IODU/C Vintages

- Option 1: NT5D61AA (HDK + FDD + CD)
- Option 2: NT5D61BA (HDK + FDD)

Steps for Upgrading to CP3 & IODU/C

- Data Dump
- Split the Core such that Core 0 is active (if redundant system)
- Disable both IOP/CMDU
- Replace Core 1 CP (1 or 2) with CP3
- Replace Core 1 IOP/CMDU with IODUC; enable IODUC
- Insert CD ROM, Install disk, press MAN RST on CP3
- Insert Keycode disk when prompted
- Proceed to Install Menu; Install SW / burn ROMS / database
- Choose database transfer from redundant side at database prompt
- Re-boot Core 1; switch processing to Core 1
- Proceed with Core 0 upgrade
  - Copy s/w from Core 1, burn ROMS, copy database from Core 1
- Re-boot Core 0; perform memory sync & hard disk sync
- Backup database

NORTEL
NORTHERN TELECOM

SCSI Device Addresses

Device	Side 0 IODUC	Side 1 IODUC	Termination
HDK	3	2	No
FDD	0	1	No
CD-ROM	6	7	Yes
IOP controllers	4	5	-------

NORTEL
NORTHERN TELECOM

IODU/C SCSI Addresses

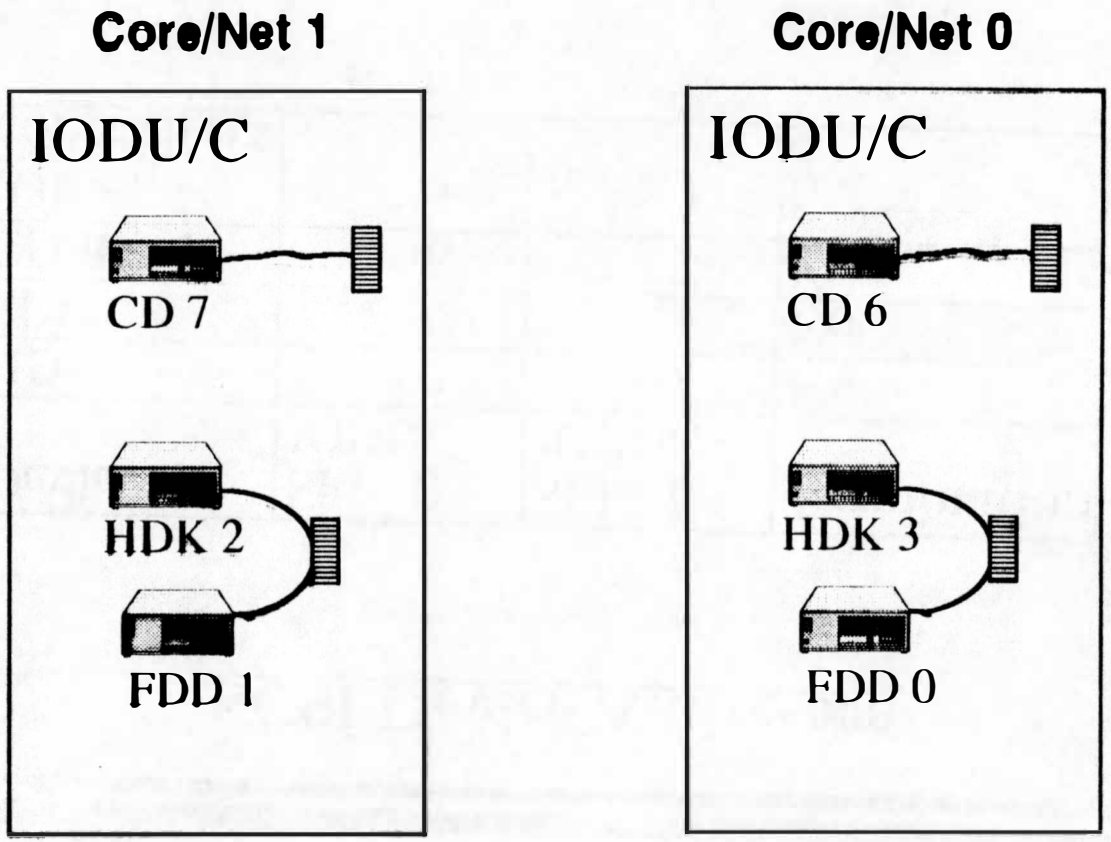

NORTEL
NORTHERN TELECOM

Omega MDU & SMDU

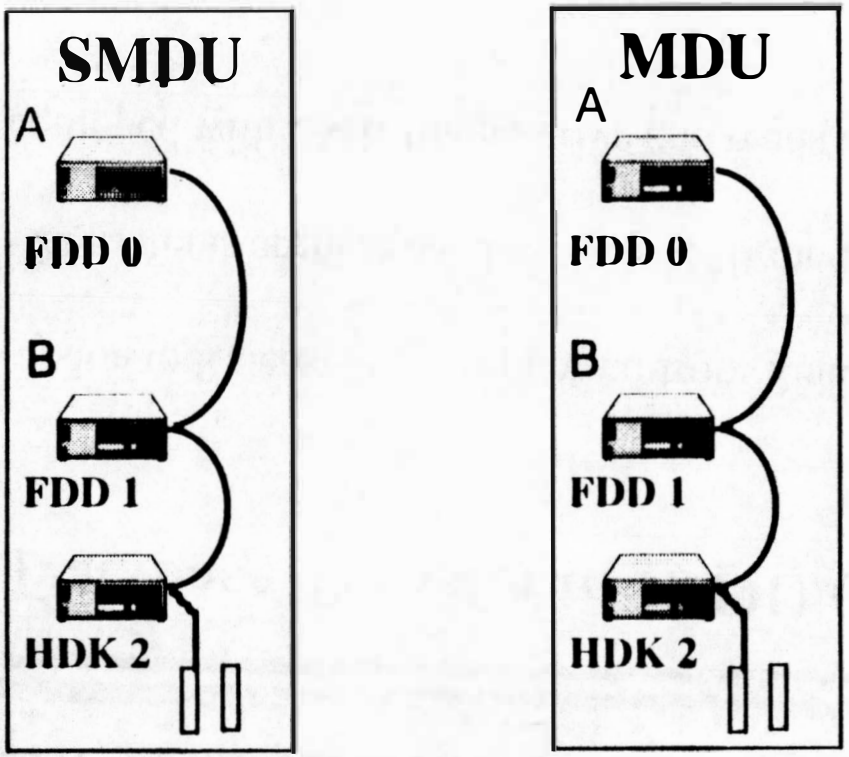

NORTEL
NORTHERN TELECOM

Database Transfer to IODU/C

Issue:

- Direct Conversion to Release 23 is supported from Release 21 or 22.
- Release 21 / 22 systems archive databases on 4MB media.
- IODU/C is equipped with 2MB floppy drive and reads only 2MB media.

Solution:

- Distinct processes have been defined to support transfer of database from Rls 21 Omega and Rls 21/22 "C" processor systems.

NORTEL
NORTHERN TELECOM

Omega to IODU/C Database Transfer

- After s/w install, CP & IODUC ROMs burned, remove IODUC from system
- Connect cable NT5D50AA, re-set MDU FDD (A) jumper if required
- Insert IODUC, MDU/SMDU/EMSI intoCore/Net shelf
- Insert Install Disk into IODUC floppy drive
- Insert 4MB database disk into FDD (A) of MDU or SMDU
- Boot Install disk, follow instructions & choose MDU to IODUC database transfer in Tool menu
- Upon completion, remove IODUC, MDU or SMDU/EMSI; reconnect IODU/C cabling
- Re-insert IODUC into system; database trasfer completed

IODU/C Database Transfer Processes

NORTEL
NORTHERN TELECOM

MDU to IODU/C Database Transfer

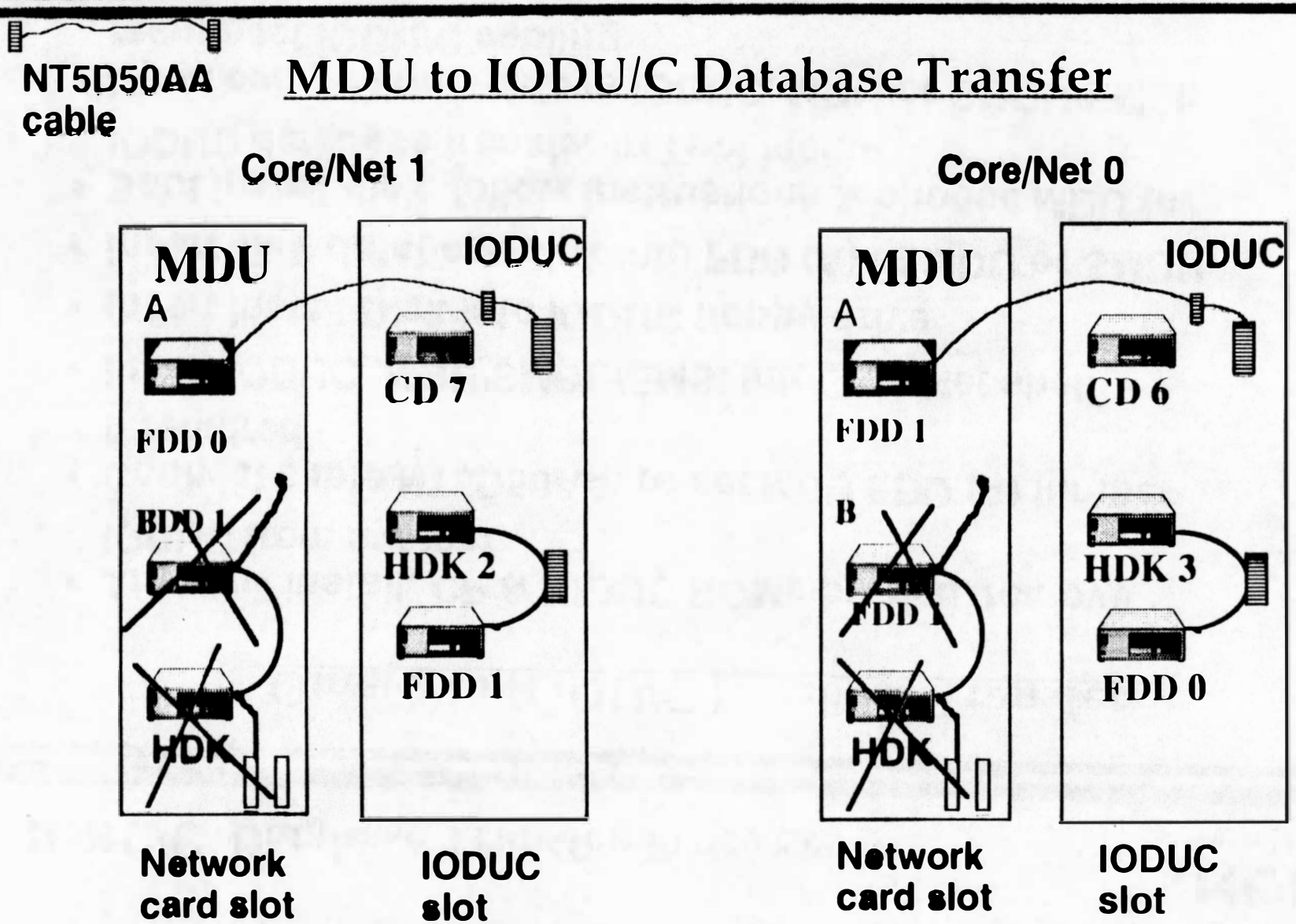

NORTEL
NORTHERN TELECOM

SMDU to IODU/C Database Transfer

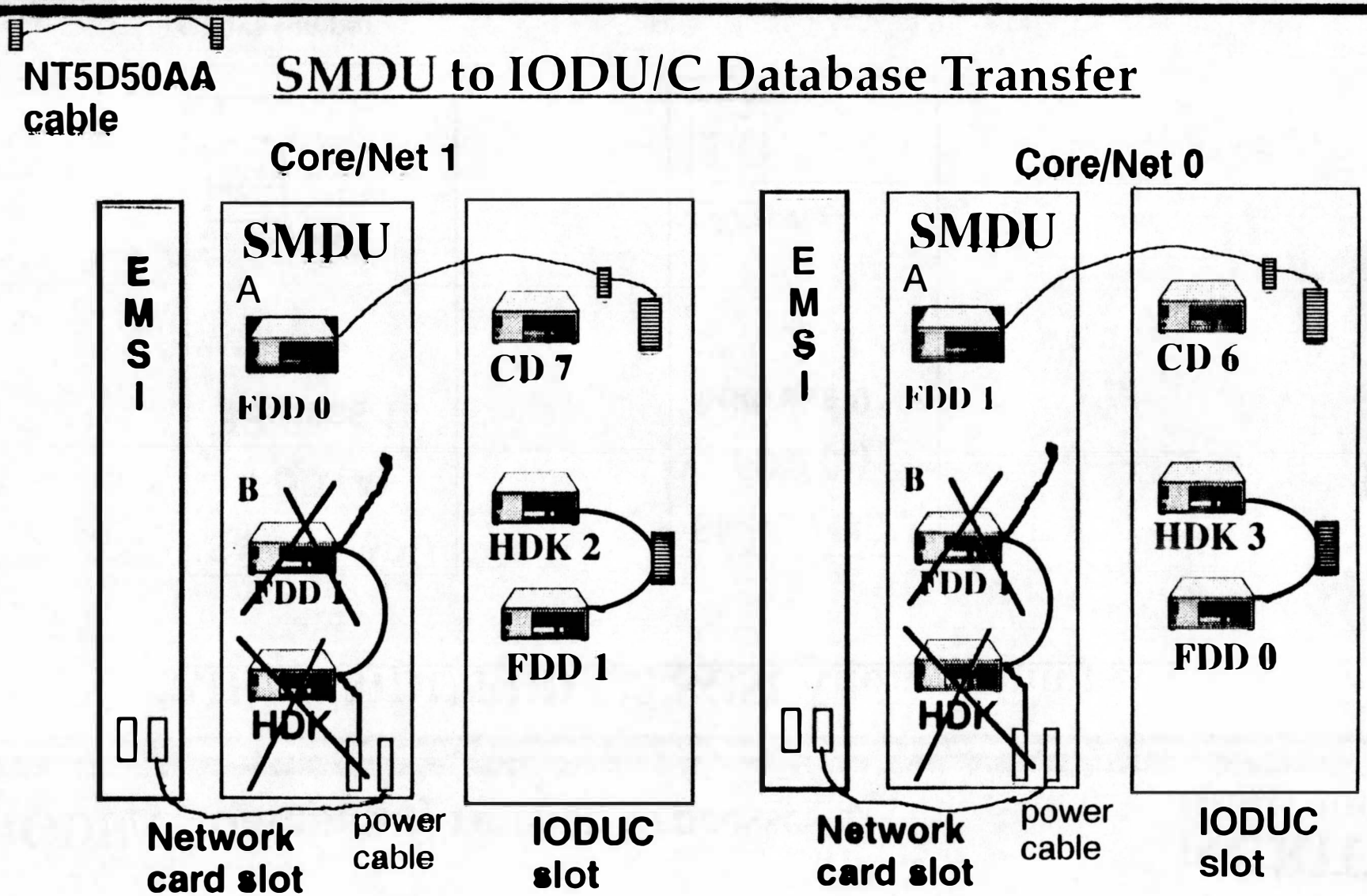

NORTEL
NORTHERN TELECOM

MDU/SMDU FDD (A) SCSI Address Jumpers

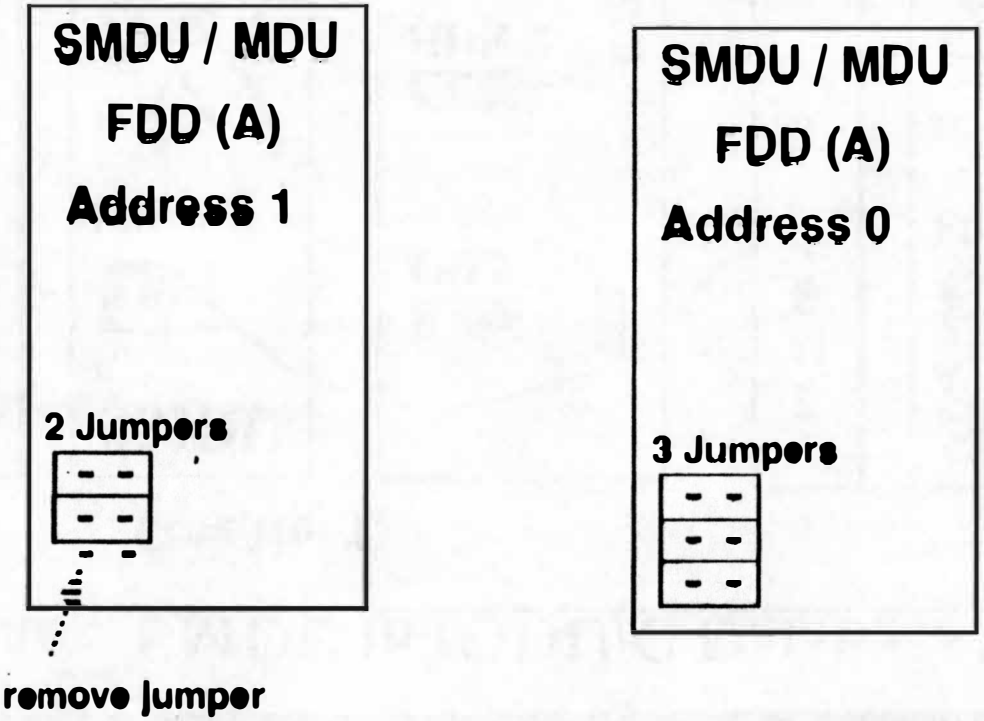

Jumpers are located near the power connector

Thor Database Transfer Process

Background:

- The Release 21/22 database resides on the IOP/CMDU. This process uses IOP/CMDU to produce a database archive on 2 mb floppies (in multi-floppy format if required).
- This process is performed immediately prior to the start of the upgrade to Release 23.
- This process may also be used to support Omega to "C" Processor database transfers.

Process:

- If the system is redundant, "split" the system.
- Insert the Database Transfer Utility that is appropriate for the processor that is currently functioning in the Meridian 1 into floppy drive 0 on Core 0.
- Reboot Core 0 to activate the program.
- Select the database archive option and have ready the number of specified 2 mb floppy diskettes.
- Place the first 2 mb diskette into the floppy drive and proceed with the database archive.
- Follow prompts to replace 2 mb floppy diskettes.
- Remove the last 2 mb floppy diskette after the database archive has completed.
- Proceed with upgrade to Release 23.

NORTEL
NORTHERN TELECOM

New System Software Installation

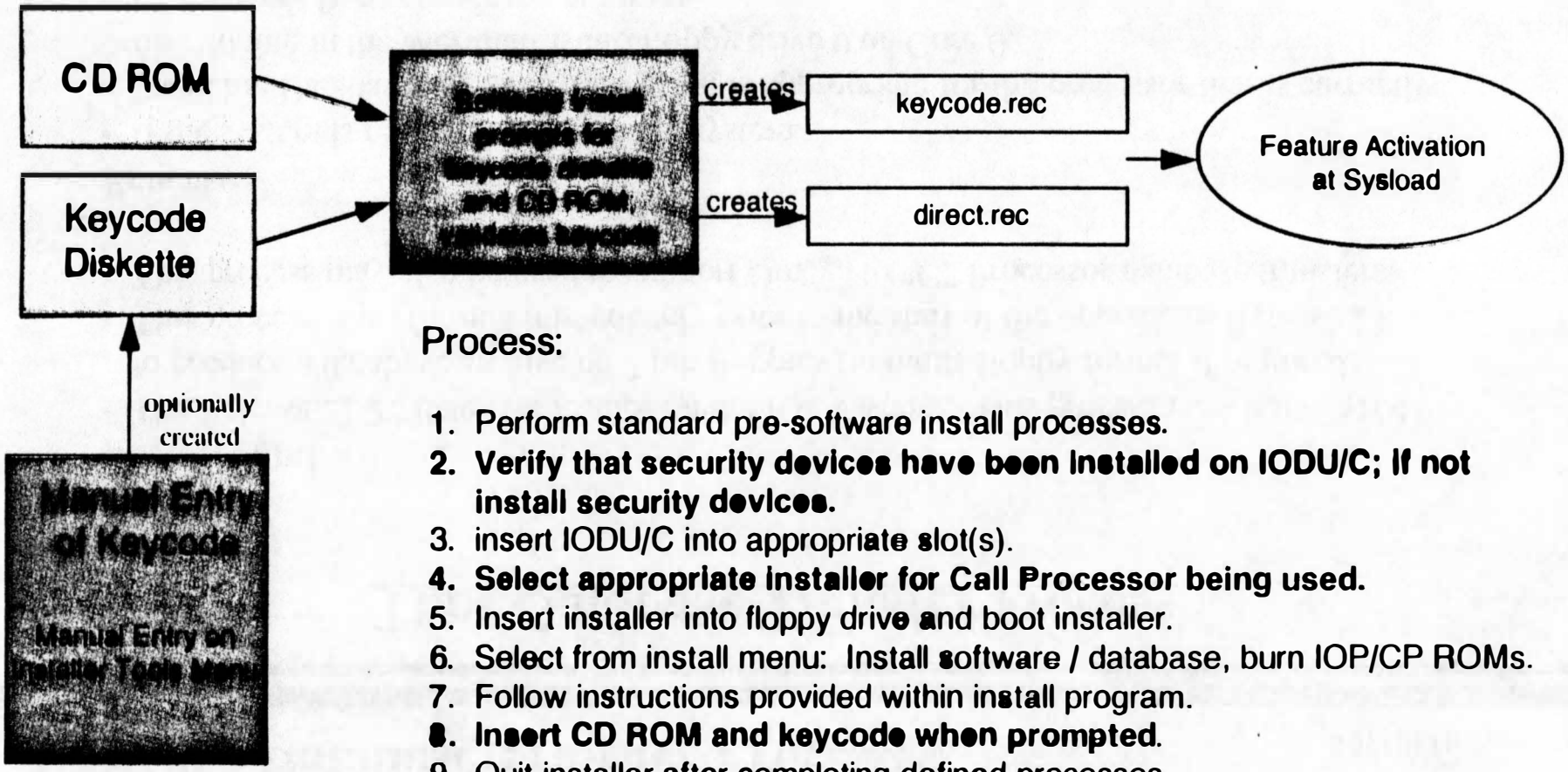

Process:

1. Perform standard pre-software install processes.
2. **Verify that security devices have been installed on IODU/C; If not install security devices.**
3. insert IODU/C into appropriate slot(s).
4. **Select appropriate installer for Call Processor being used.**
5. Insert installer into floppy drive and boot installer.
6. Select from install menu: Install software / database, burn IOP/CP ROMs.
7. Follow instructions provided within install program.
8. **Insert CD ROM and keycode when prompted.**
9. Quit installer after completing defined processes.
10. Complete new systems installation using standard processes.

System Upgrade Software Installation

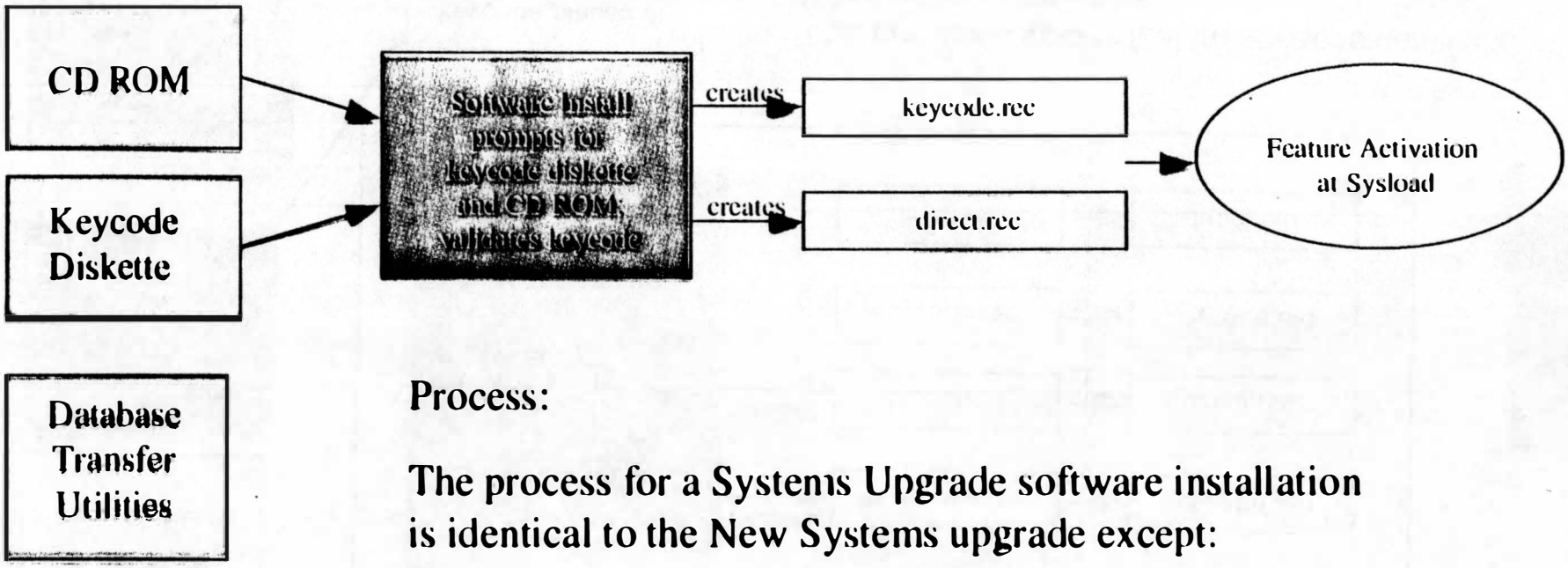

Process:

The process for a Systems Upgrade software installation is identical to the New Systems upgrade except:

- The previous system must first be upgraded to Release 21 or 22.
- **Database Transfer Processes must be used to transfer the database onto the IODU/C**

NORTEL
NORTHERN TELECOM

Feature Enhancement / ISM Limit Change

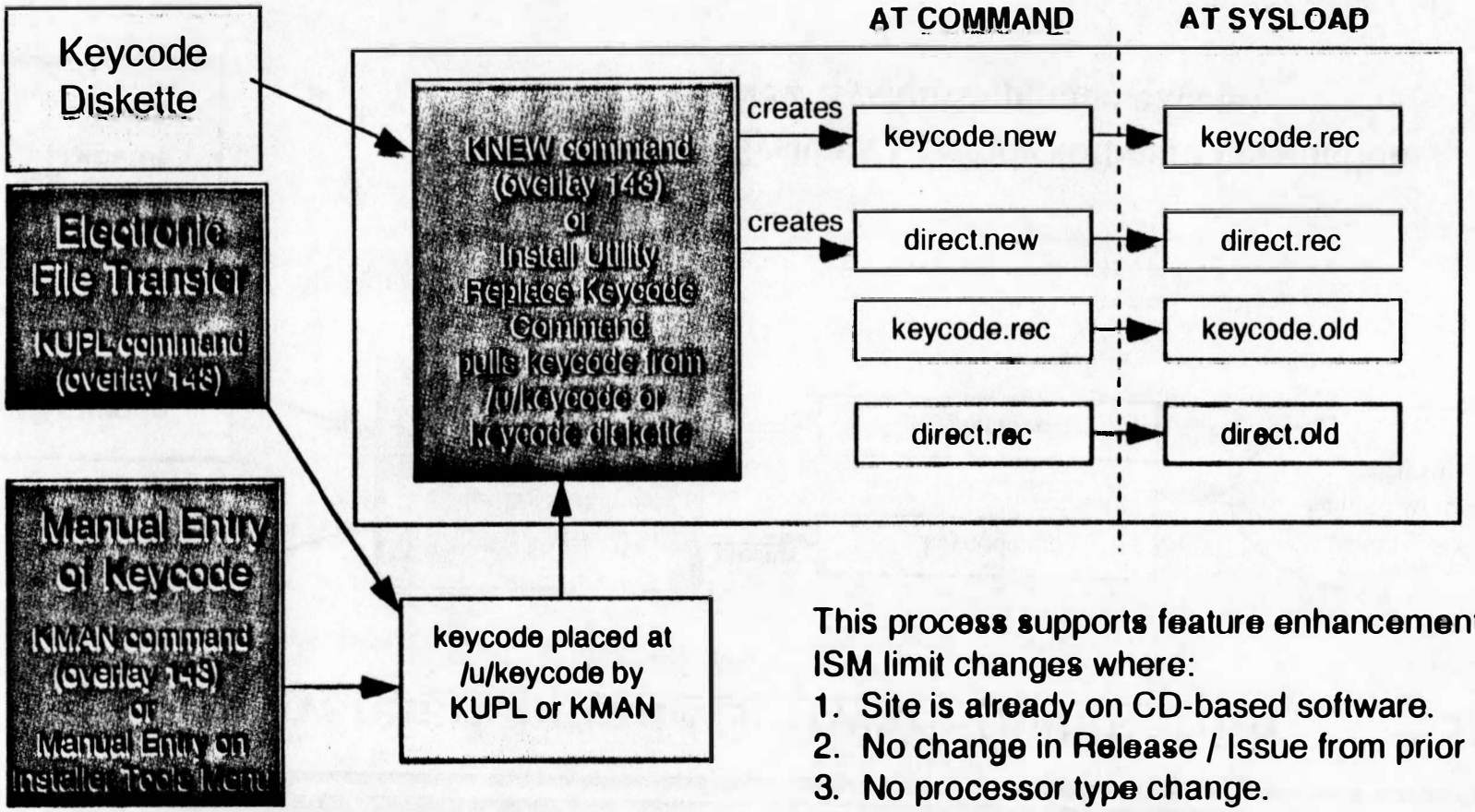

This process supports feature enhancements and ISM limit changes where:

1. Site is already on CD-based software.
2. No change in Release / Issue from prior software
3. No processor type change.

Note: If redundant system "split" the system prior to keycode replacement.

NORTEL
NORTHERN TELECOM

Keycode Activation Process

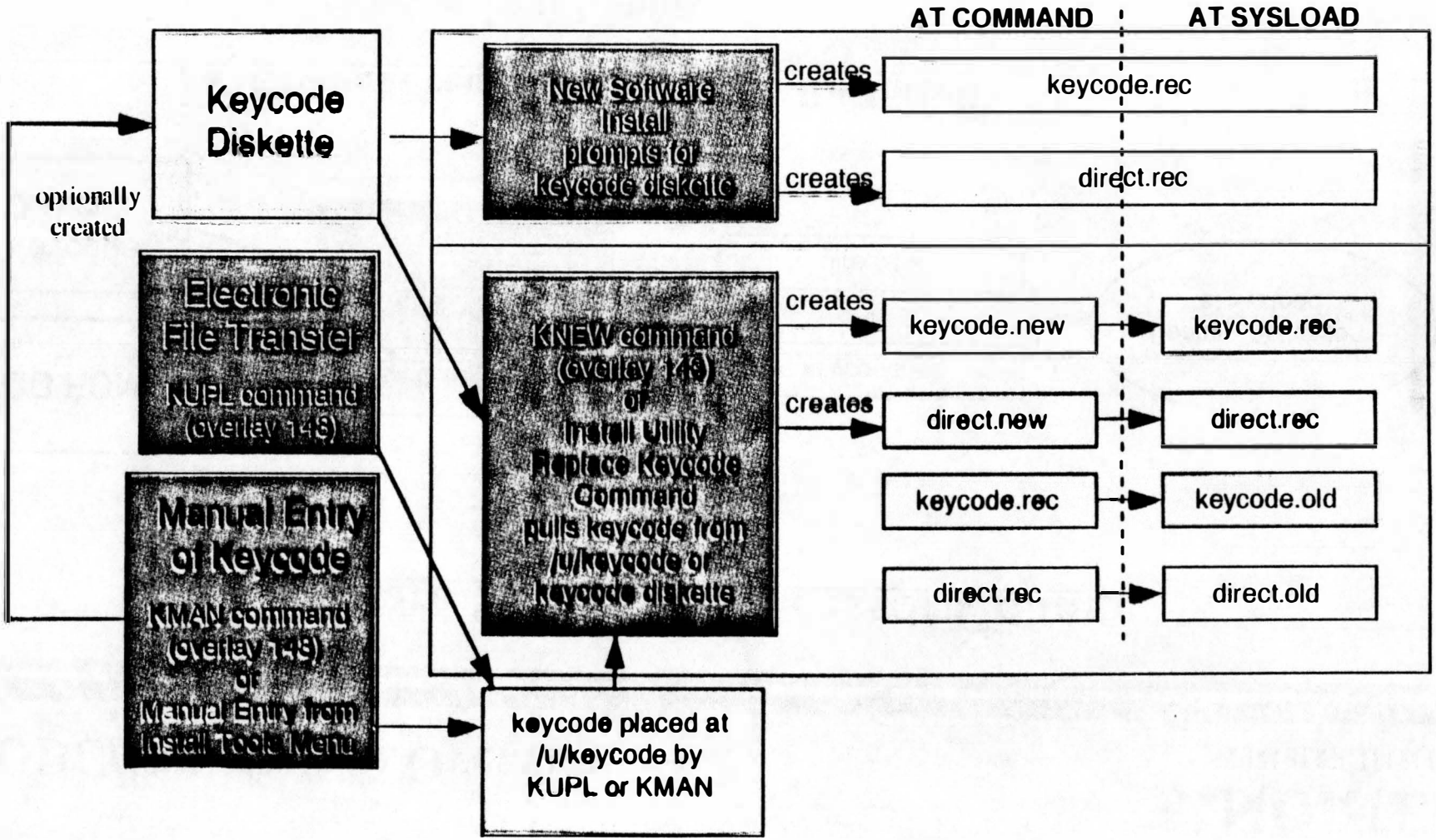

NORTEL
NORTHERN TELECOM

Software Upissue / Processor Change

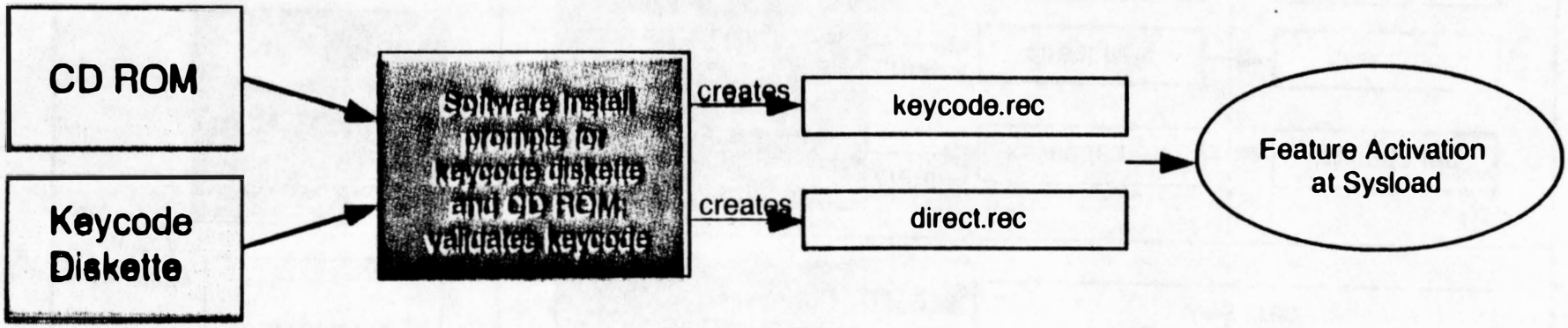

- **Changes requiring Software Re-Install**
  - **Release or Issue Change**
    - Software and keycode always shipped
  - **Processor Type Change**
    - Keycode always shipped
    - New software may not be required

NORTEL
NORTHERN TELECOM

Archive / Restore

- Changes to Archive / Restore to compensate for reduction of capacity from 4 mb to 2 mb floppy on IODU/C
- Applicable to all Release 23 systems; with either IODU/C or IOP/CMDU
- Added feature functionality
  - Compression
    - Not always used during archive processes
    - When used, limited to 15% of real time utilization
  - Multi-disk archive / restore
    - Diskette are serialized and internally labeled
    - Archive.dat - archive control file ensures integrity of archive / restore processes
- Functionality changes in existing BKO and RES commands
- New commands available in Overlay 143:
  - ABKO - Attended Archive
  - ARES - Attended Restore

BKO - Unattended Archive

- **Both compression and multi-disk archive capability are available.**
  - Order of application
    - Single diskette uncompressed
    - Single diskette compressed
    - Two diskettes compressed (if redundant system)
- **Archive commences on the floppy disk drive of the active core.**
- **Alternate night "2 deep" archive is retained except where database exceeds 1 compressed diskette.**
- **Archive on IOP/CMDU is supported on both 4 mb and 2 mb media**
- **Archive on IODU/C is only supported on 2 mb media**
- **Reports:**
  - Prior to archive: size of files to be archived and projected number of diskettes required
  - During archive: progress report every 10 seconds.
  - After archive:
    - Size of archive file.
    - Which floppy drives were used.
    - Free floppy diskette space.
    - If archive fails, failure report on login.

ABKO - Attended Archive

- **New command within Overlay 143**
- **Compression is not used**
- **Only Active Core Floppy Drive is used**
- **Craftperson is prompted to insert additional diskettes until archive is completed**
- **Archive on IOP/CMDU is supported on both 4 mb and 2 mb media**
- **Archive on IODU/C is only supported on 2 mb media**
- **Reports:**
  - Prior to archive: size of the files to be archived and projected number of diskettes required
  - During the archive: progress reports.
  - At the completion of archive: Confirmation of successful archive.

NORTEL
NORTHERN TELECOM

RES - Unattended Restore

- **Restore of compressed or non-compressed, single disk or two-disk archives is supported.**
- **Unattended Restore on Opt 61C/81/81C searches both drives for the latest Archive.**
- **Restore on IOP/CMDU is supported on both 4 mb and 2 mb media**
- **Restore on IODU/C is only supported on 2 mb media**
- **Reports:**
  - While the process of restore is active, appropriate reports are generated indicating status and validity of the restore process.

ARES - Attended Restore

- **New command within Overlay 143**
- **Restore of Release 23 compressed or non-compressed, single disk or multi-disk archives is supported.**
- **Only Active Core Floppy Drive is used**
- **Craftperson is prompted to insert additional diskettes until restore is completed**
- **Restore on IOP/CMDU is supported on both 4 mb and 2 mb media**
- **Restore on IODU/C is only supported on 2 mb media**
- **Reports:**
  - While the process of restore is active, appropriate reports are generated indicating status and validity of the restore process.

Other Software Commands

- KRVR - keycode reversion to prior keycode
- KSTT - status of all keycodes in system (i.e. returns: OK)
- KSHO - shows contents of selected keycodes
- KDIFF - shows differences between selected keycodes
- KOUT - "outs" a keycode prior to activation; nullifies prior KNEW command
- SDID - displays security device contents:

Security Device	
ID0:	NT5D61BA 01NNTM18310PBL IOP
SDID0:	EC5E7000011B6789
NT SD type:	NT_STD
NT System ID:	123456789012

NORTEL
NORTHERN TELECOM

Agenda

- **CP2 to CP3 Upgrade**
  - Software Conversion from R21 (or R22) to R23
- **IOP/CMDU (Thor) to IODU/C Upgrade**
  - R23 Software Installation
  - Thor Database Transfer Procedure
- **MDU (Omega) to IODU/C Upgrade**
  - Omega Database Transfer Procedure
- **IODU/C Software Commands**

NORTEL
NORTHERN TELECOM

Rls 23 Upgrade Demo - Option 61C/CP2/IODU/C

- Data Dump
- Split the Core such Core 0 is active (if redundant system)
- Disable IOP/CMDU; replace with IODU/C; enable IODU/C
- Insert CD ROM and processor appropriate install disk into Core 1 IODU/C; press MAN RST on CP card
- Proceed to Install Menu; install software / burn roms / install database
- Insert keycode diskette when prompted
- Choose database transfer from redundant side at database prompt
- Re-boot Core 1; switch processing to Core 1
- Proceed with Core 0 Upgrade
  - Copy software from Core 1, burn roms, copy database from Core 1
- Re-boot Core 0; perform memory sync and hard disk sync
- Backup database

Edwin Rosero

A/P ISDN Connectivity Phase II (China)

- Functional Overview
- Feature Setup, Activation & Deactivation
- User Interface, Administration & Maintenance
- Feature Interactions
- H/W Requirements
- Tools Needed
- Debugging Hints
- Example of Configuration & Maintenance

Functional Overview

The features supported on ISDN Primary Rate Interface (PRI2) & Basic Rate Interface (BRIT) are :

1. Circuit Switched Basic Call Service (Voice and Data);
2. Calling Line Identification Presentation and Restriction;
3. COT, DID, DOD and TIE Trunk Call Types;
4. 64 kb/s Clear Bearer Capability;
5. Channel Negotiation;
6. Overalp Sending and Overlap Receiving.

M1 to CO Connectivity

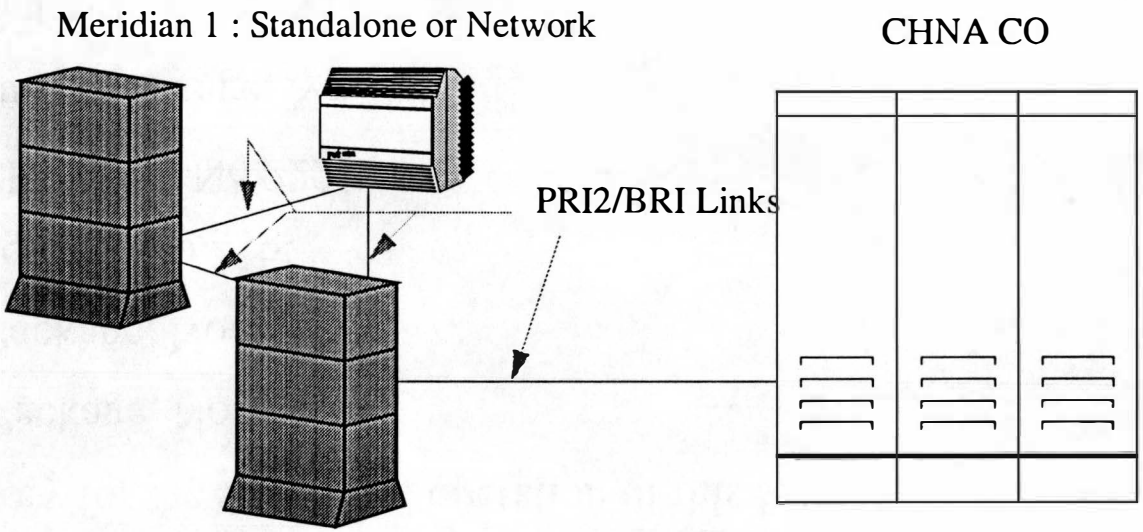

Feature Setup, Activation & Deactivation

Packages Required

This feature does not introduce any new packages; however, the following packages are mandatory for the successful operation of this feature :

- ISDN Package, No.145;
- IPRA Package, No.202;
- BRI Package, No.216;
- MSDL Package, No.222;
- BRI Trunks Package, No.233;
- UIPE Gateway Package, No.283;
- DDSP Package, No.19;
- OVLP Package, No.184;
- PRI2 Package, No.154;

Feature Setup, Activation & Deactivation (cont.)

The basic connectivity is configured as per the D-channel basis.

The response to IFC prompt should be APAC and CNTY prompt should be CHNA in Overlays 17 and 16 to turn on the feature.

Message Sequence for Outgoing Call

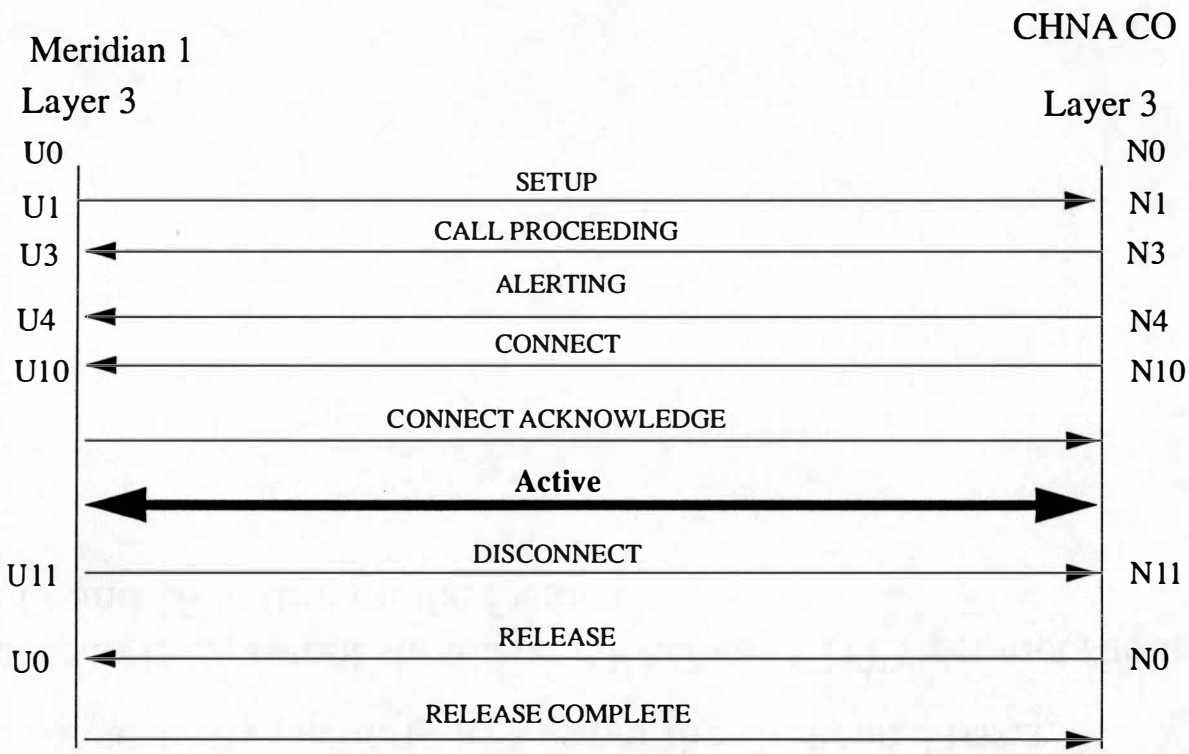

Message Sequence for Incoming Call

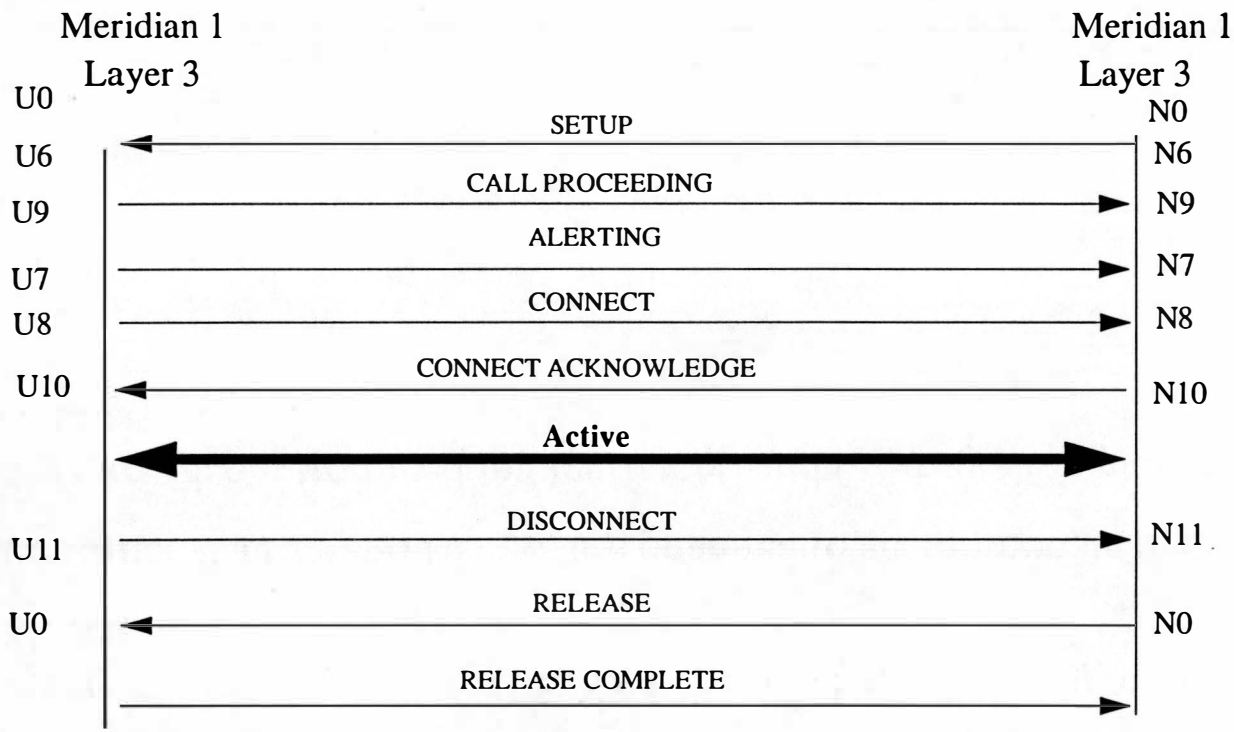
Meridian 1
Layer 3
Meridian 1
Layer 3
U0
N0
SETUP
U6
N6
CALL PROCEEDING
U9
N9
ALERTING
U7
N7
CONNECT
U8
N8
CONNECT ACKNOWLEDGE
U10
N10
Active
DISCONNECT
U11
N11
RELEASE
U0
N0
RELEASE COMPLETE

User Interface, Administration & Maintenance

- A new response to CNTY (CHNA), for Trunk Route Data Block configuration (LD 16) is introduced.
- A new response to CNTY (CHNA) for D-channel configuration (LD 17) is introduced.
- Print routines (LD 21 and LD 22) are changed to accommodate the new interface.
- Changes are also introduced in Overlay 60 and Overlay 96 which are used for the loop and D-channel maintenance.

Feature Interactions

- ISDN PRI2/BRIT
  - Calling Line Identification
- Universal ISDN Protocol Engine (UIPE)

H/W Requirements

- Basic Rate :

  S/T Interface Line Card;

  D-channel Processor;

  - MISP for Opt 51C-81C
  - SISP for Opt 11C

  Clock Controller QPC775E for 51C-81C

  NTAK20BB for 11C

- Primary Rate :
  - PRI pack QPC720;
  - MSDL for UIPE D-channel NT6D80AA for Opt 51C-81C;
  - DDCH for Opt 11C;
  - Clock Controller QPC775, Release E or greater

Tools Needed

- 4D Database on MAC
- Microtek Compiler

Debugging Hints

- Messages can be monitored in Overlay 96 for PRI and Overlay 48 for BRI, these give both the UIPE and Debug (ISDN) messages.
- Can use the serial port on the MSDL or MISP card for monitoring the messages that actually go out on the D-channel.
- Protocol Simulator for simulating and monitoring messages.

Example of Configuration & Maintenance

Primary Rate Configuration :

Overlay 17

To configure D-channel,

Table 1: D - Channel configuration

PROMPT	RESPONSE
REQ	CHG
TYPE	ADAN
ADAN	NEW DCH XX
.....	.....
IFC	APAC
CNTY	**CHNA**
DCHL	LOOP
.....	.....

Overlay 16

To configure Route Data Block,

Table 2: RDB configuration using Overlay 16

PROMPT	RESPONSE
REQ	NEW/CHG
TYPE	RDB
CUST	0-99
ROUT	0-511
TKTP	TIE/COT/DID
...	
DGTP	PRI2
...	...
ISDN	YES
...	....
IFC	APAC

Table 2: RDB configuration using Overlay 16

PROMPT	RESPONSE
CNTY	CHNA

Overlay 14

To configure B-channel,

PROMPT	RESPONSE
REQ	NEW/CHG
TYPE	DID/COT/TIE
CUST	0-99
TN	Loop Memb
....	....
RTMB	Rout Memb
...	...

Basic Rate Configuration :

Overlay 27

Define the LAPD Protocol Group Number, Multi-purpose ISDN Signalling Processor and SILC.

Overlay 16

To configure Route Data Block,

Table 3: RDB configuration for BRI

Prompts	Responses
REQ	NEW/CHG
TYPE	RDB
CUST	0-99
ROUT	0-511
TKTP	COT/DID/TIE
...	...
DGTP	BRI
...	...

Table 3: RDB configuration for BRI

Prompts	Responses
IFC	APAC
CNTY	CHNA
CNEG	YES/(NO)
...	...
ISDN	YES
.....	.....

Overlay 27

Define the Digital Subscriber Loop,

Table 4: DSL configuration using Overlay 27

Prompts	Responses
REQ	NEW/CHG
TYPE	DSL
DSL	l s c dsl
....	....

Table 4: DSL configuration using Overlay 27

Prompts	Responses
CTYP	SILC
MISP	0, 2, 4,... 158 1-9
MODE	TE
.....	.....
B1	YES, (NO)
MEMB	1-254
.....	.....
B2	YES, (NO)
MEMB	1-254
.....	.....

CDR on Busy Tone

1. Glossary

ABAN	CDR on Abandoned Calls on ringing (route config.).
ABDA/ ABDD	CDR on Abandoned on ringing or on busy tone (set config.) - Allowed or Denied
CDR	Call detail Recording
CDRB	CDR on Abandoned Calls on Busy Tone (route config.)
CTY	CDR on TTY
ICDR	Internal CDR
TTA	Time To Answer

2. Functional Overview

- Prior to R23, CDR used to provide B records when a call was released before being answered.
- CDR on Busy Tone provides B records when the originator receives a Busy Tone.
- The CDR record is provided by the node on which the busy set is connected.
- CDR on Busy Tone applies to Incoming Calls or Internal Calls.
- Its configuration depends upon general CDR and CDR TTA setup.

2. Functional Overview (more)

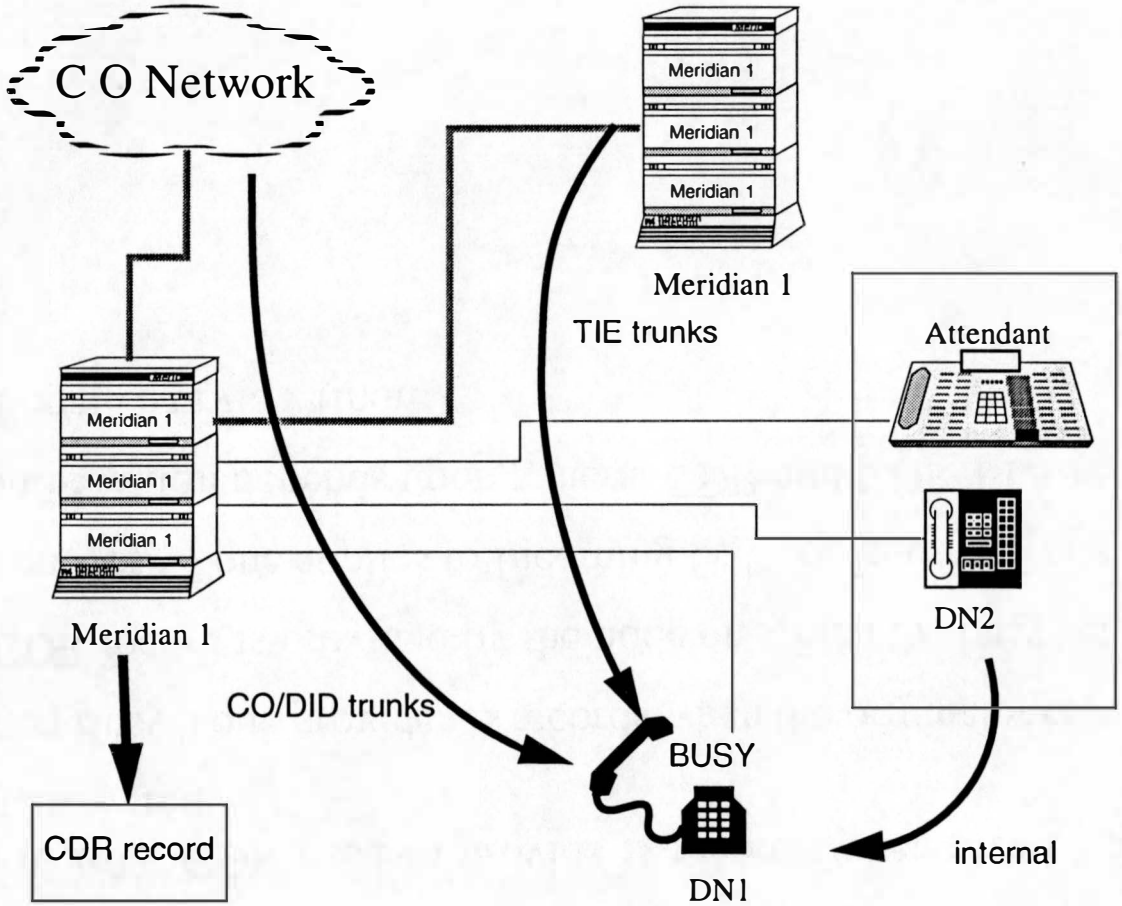

2. Functional Overview (more)

- The Busy indication is printed on the third line of the B record.
- The content of the TERID field is affected by the type of the last redirection (when the call has been redirected).
- For incoming calls, the TERID field content depends also upon the value of prompt LAST in LD16.

```
B  001  00  T010004  4001     00/00  00:08:23
 &                                                    000 000
 &      B
```

2. Functional Overview (more)

- TerID field for Internal Calls and Incoming Calls when LAST = YES in LD 16

Type of Last Redirection	TerID in B record output
Simple Call (Not redirected)	DN of the busy set
Call Forward All Calls	DN of the busy set
Hunt	DN of the first busy set. If terminating set is a BRI set, then DN of the BRI set.
Group Hunt	Pilot DN

- TerID field for Incoming Calls when LAST = NO in LD 16

Type of Last Redirection	TerID in B record output
Simple Call (Not redirected)	DN of the busy set
Call Forward All Calls	Originally dialed DN
Hunt	Originally dialed DN
Group Hunt	Originally dialed DN

3. Feature Set up, Activation & Deactivation, Benefits

- CDR on Busy Tone is activated as soon as a busy tone is returned to the originator of the call finishing on a busy set.
- CDR on busy tone does not apply to outgoing calls.
- Cases of congestion do not produce B records.
- CDR on Busy tone but not on Overflow tone.

Benefits:

- Can be used for statistics on customer response performance.
- Measurement done without calls being charged.
- Can be used to defined needs in staff and equipment.

4. User Interface, Administration & Maintenance

- CDR on Busy Tone has been developed under package: CDR New Format (234).
- It is also depending on packages:

CDR(4), CDRTTY(5), ICDR(108).

- CDR is configurable on a Set class of service basis for internal calls.
- CDR is configurable on a Route basis for incoming calls.

- Configuration depends upon general CDR and CDR TTA setup.

4. User Interface, Administration & Maintenance (more)

LD 17	PARM	
Prompt	**Response**	**Description**
FCDR	NEW	Use NEW CDR format.NO = Use OLD CDR format (default).

LD 15	FTR_DATA	
Prompt	**Response**	**Description**
OPT	TTAA	Time To Answer and Abandoned call records Allowed. TTAD = Time To Answer and Abandoned call records Denied (default).

LD 15	CDR_DATA	
Prompt	**Response**	**Description**
CDR	YES	CDR provided. NO = CDR not provided (default).

4. User Interface, Administration & Maintenance (more)

- For incoming calls:

LD 16	RDB	
Prompt	**Response**	**Description**
CDR	YES	CDR output for the specified route.
INC	YES	CDR output for all incoming calls.
LAST	YES or (NO)	CDR printing content option for redirected calls.
TTA	YES	Time to Answer on the incoming route.
CDRB	YES	Allow CDR on abandoned calls on busy tone. NO = Deny CDR on abandoned calls on busy tone (default).

4. User Interface, Administration & Maintenance (more)

- For internal calls:

LDs 10, 11, or 27		
Prompt	**Response**	**Description**
CLS	ABDA	Abandoned call record on ringing or busy tone allowed and Time To Answer allowed. ABDD = Abandoned call record on ringing or busy tone denied and Time To Answer denied (default).
CLS	ICDA	Internal Call Detail Recording Allowed. ICDD = Internal Call Detail Recording Denied (default).

LD 12		
Prompt	**Response**	**Description**
ICDR	ICDA ICDD	Internal Call Detail Recording Allowed. Internal Call Detail Recording Denied (default).
ABAN	ABDA	Abandoned call record on ringing or busy tone allowed and Time To Answer allowed. ABDD = Abandoned call record on ringing or busy tone denied and Time To Answer denied.

5. System Messages

SYS0014: Existing data removed because FCDR package is restricted.

- Output during sysload when FCDR package is restricted.
- Prevent from Data dump.

6. Feature Interactions

• Night Service	No CDRB.
• ACD night treatment	No CDRB.
• CFAC HUNT GROUP HUNT	CDR content affected by the type of the last redirection.
• BRI sets	CDR content affected when

	BRI set is associated with Hunt.
• MADN	AUXID field in B record should not be taken into account.

7. H/W Requirements

- There are no specific hardware requirements.

8. Tools Needed

- CDR processing application to be modified.
- There are no specific tools required.

9. Debugging Hints

- None

10. Appendix A - Example of Configuration & Maintenance

INTERNAL CALLS:

B records produced depending on the class of service ABDA of the originator or of the Terminator. Terid field depending on type of the last redirection.

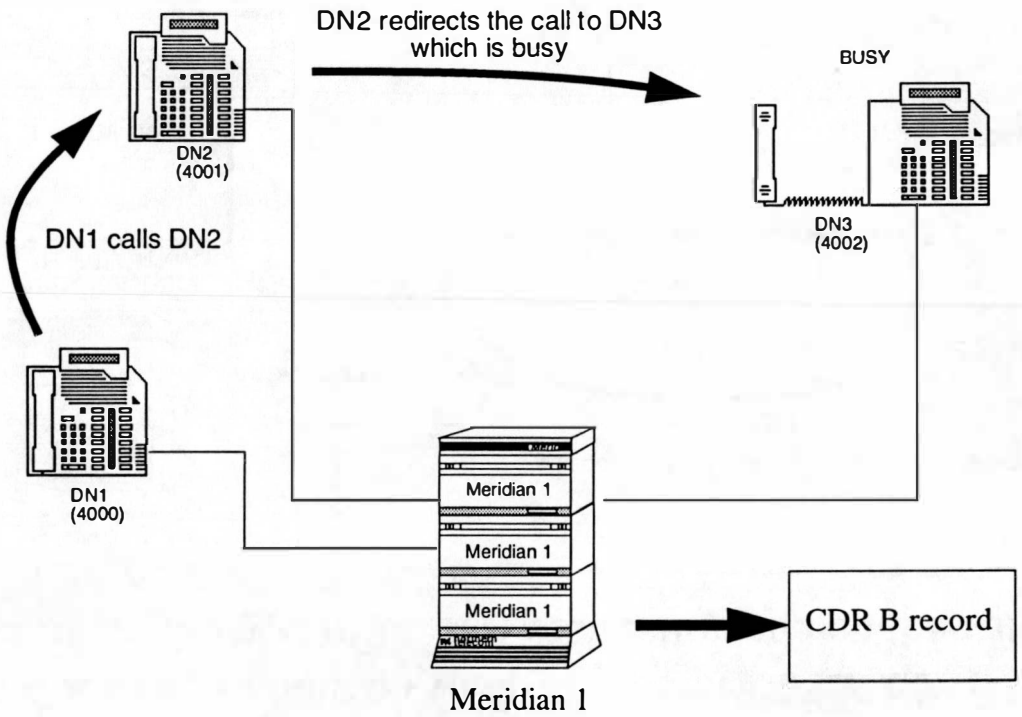

Incoming calls:

B record produced depending on value of prompt CDRB in LD16 for route 10. Terid field depending on the type of the last redirection and on the value of prompt LAST.

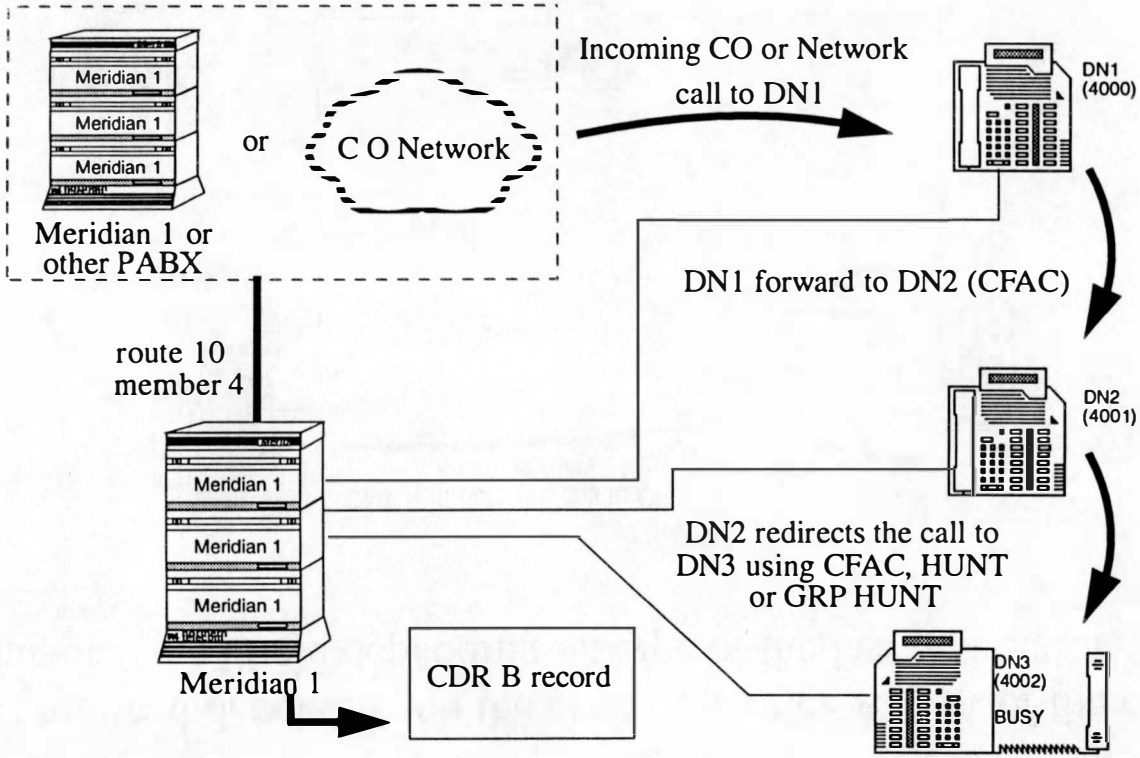

Outgoing calls and Network-wide redirection:

If CDRB was set on route 1 and on route 2, Node 1 would not produce a B record - Node 2 would produce a B (redirection on node 1 is not taken into account).

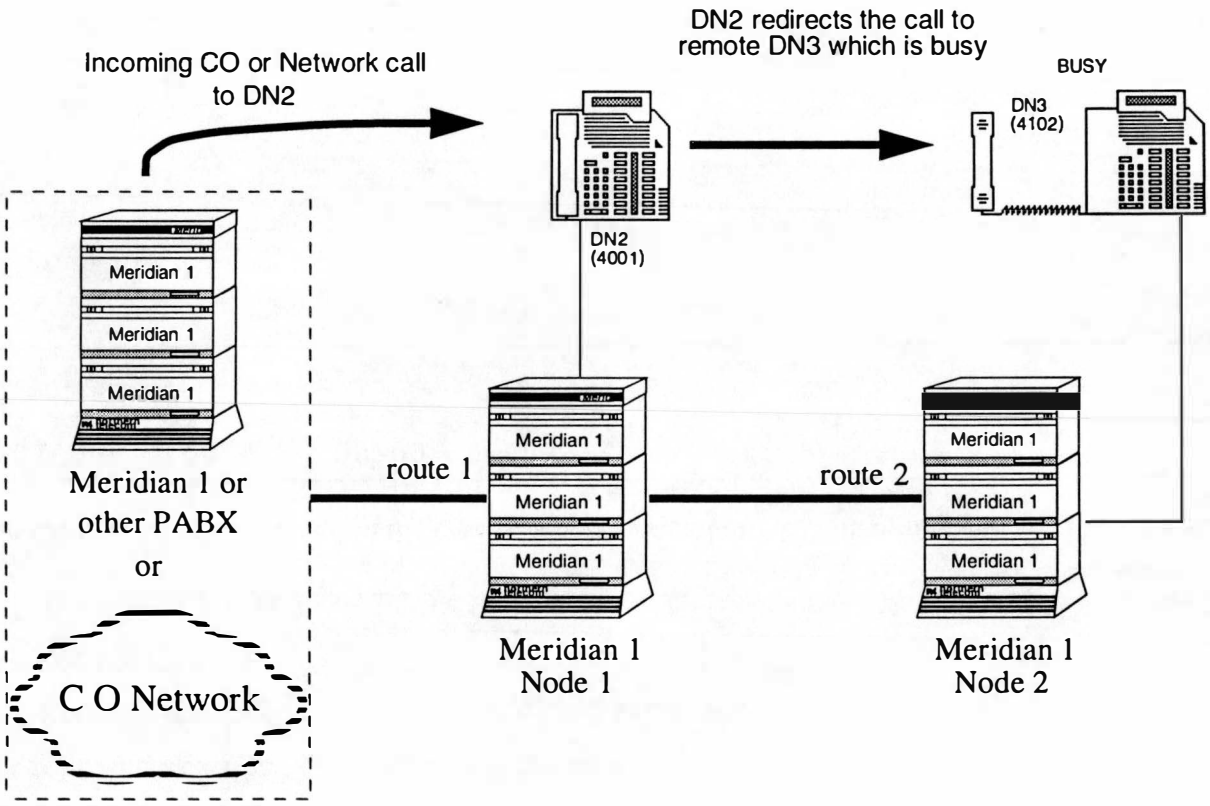

11. Appendix B - Examples related to redirection scenarios

Simple Incoming Call

The following describes a Simple Incoming Call scenario:

1 Route 10 member 4 places an incoming call to DN 4001.

2 DN 4001 is busy.

3 The Meridian 1 produces a CDR B record.

The CDR B record produced in the case of a network call or a CO incoming call has the following format:

```
B  001  00  T010004  4001     00/00  00:08:23
 &                                                          00 000
 &      B
```

Incoming Call - Redirected Internally

Last Redirection is by Call Forward All Calls

The following scenario describes an incoming call that is redirected internally. The last redirection is by Call Forward All Calls.

1. Route 10 member 4 places an incoming call to DN 4000.
2. DN 4000 forwards the call to DN 4001.
3. DN 4001 redirects the call, using Call Forward All Calls, to DN 4002.
4. DN 4002 is busy. The originating party receives a busy tone.
5. The Meridian 1 produces a CDR B record.

If **LAST = YES** in LD 16, the printed Terminating ID is the DN of the busy set, DN 4002. The output is the following:

```
B  001  00  T010004  4002          00/00  00:08:23
 &                                                                  000 000
 &      B
```

If **LAST = NO** in LD 16, the printed TerID is the DN of the dialed DN 4000. The output is the following:

```
B  001  00  T010004  4000          00/00  00:08:23
 &                                                                  000 000
 &      B
```

Incoming Call - Redirected Internally

Last Redirection is by Hunt

The following scenario describes an incoming call that is redirected internally and the last redirection is by the Hunt feature:

1. Route 10 member 4 places an incoming call to DN 4000.
2. DN 4000 forwards the call to busy DN 4001.
3. DN 4001 is redirected, using Hunt, to DN 4002.
4. DN 4002 is busy. The originating party receives a busy tone.
5. The Meridian 1 produces a CDR B record.

If **LAST = YES** in LD 16, the printed TerID is the DN of the first busy set, DN 4001. The output is the following:

```
B  001  00  T010004  4001     00/00  00:08:23
 &                                                    000 000
 &      B
```

Note: If the last busy set is a Basic Rate Interface (BRI) set, then the DN of this set is printed as the terminating ID in the CDR B record.

If **LAST = NO** in LD 16, the printed TerID is the dialed DN 4000. The output is the following:

```
B  001  00  T010004  4000         00/00  00:08:23
 &                                                    000 000
 &      B
```

Incoming Call - Redirected Internally

Last Redirection is by Group Hunt

The following scenario describes an incoming call that is redirected internally and the last redirection is by the Group Hunt feature:

1. Route 10 member 4 places an incoming call to DN 4000.
2. DN 4000 forwards the call, using Call Forward All Calls, to Pilot DN 8888 of a Group Hunt list.
3. All members of the group Hunt list are busy, and no queuing is allowed. The originating party receives a busy tone.
4. The Meridian 1 produces a CDR B record.

If **LAST = YES** in LD 16, the printed TerID is Pilot DN 8888 of the Group Hunt List. The output is the following:

```
B  001  00  T010004  8888        00/00  00:08:23
 &                                                                  000 000
 &      B
```

If **LAST = NO** in LD 16, the printed TerID is the Dialed DN 4000. The output is the following:

```
B  001  00  T010004 4000         00/00  00:08:23
 &                                                                  000 000
 &      B
```

Incoming Call - Redirected Network-wide

The following describes an incoming call that is redirected network-wide:

1 Route 10 member 4 places an incoming call to DN 4001. DN 4001 is on Node 1.

2 DN 4001 redirects the call to remote DN 4102 on Node 2.

3 DN 4102 is busy.

4 Node 1, to which DN 4001 is connected, **does not** produce a CDR B record. However, Node 2 may produce a B record, as this is the node to which the busy set is connected.

The format of the B record output in this situation is the same as that for a simple incoming call.

Internal Calls

Same logic as for incoming calls when LAST = yes applies for internal calls.

The LAST prompt in LD16 does not apply for internal calls.

CDR B records are produced depending on the class of service of the originator or of the terminator specified in the CDR record.

CLASS: Calling Number and Name Delivery

Presenter:	Linda Hsieh	655-7833
Designers:	Danny Duong	655-7071
	Nancy Hoang	655- 7869
	Linda Hsieh	655-7833
	Sudheer Sathi	872-8916
	Anil Sharma	872-8925
Manager:	Peter Lee	655-7388

Feature Description

~~The CLASS Modem (CMOD) unit, the~~ CLASS: Calling Number and Name Delivery (CLASS CND) feature provides the following functions which allows the Meridian 1 to deliver Bellcore standard CND information to a CLASS set when presenting it with a new call:

- CLASS Calling Number Delivery
- CLASS Calling Name Delivery

On a CNUMB and/or CNAME packaged system, the system administrator can identify a 500/2500 set as a CLASS set by activating one or both CND functions via class of service configuration via LD10.

CMOD Unit

The CMOD unit is the interface that transports the CND information from the Meridian 1 to the CLASS sets, and it is only supported by the XCMC pack (NT5D60AA) that has the capability of delivering the CND data via FSK modem signalling to the CLASS sets.

The system administrator can configure up to 255 CMOD units via LD13. And similar to digit tone receivers, the CMOD units are system resources that is shared across the customers on a multi-customer Meridian 1 system.

When a call is presented to a CLASS set, an available CMOD unit is automatically allocated. Upon reaching the *CND delivery interval*[1], the appropriate CND information is then delivered to the CLASS set. The allocated CMOD unit is released as soon as one of

the following events takes place:

- when ringing resumes on the CLASS set after the CND delivery interval; or
- when the call is disconnected, or answered, or redirected.

1. The CND Delivery Interval refers to the first silent interval, after ringing has been applied for a new call, that is greater than 2 seconds.

CLASS Calling Number Delivery

Whenever a call is presented to a set that is only CLASS Calling Number Delivery activated, the following CND information is delivered to the set:

- the date and time stamp of call presentation; and
- the calling number

CLASS Calling Name Delivery

- Whenever a call is presented to a set that is only CLASS Calling Name Delivery activated, the following CND information is delivered to the set:
  - the date and time stamp of call presentation; and
  - the calling name

CLASS Calling Name Delivery and CLASS Calling Name Delivery

- Whenever a call is presented to a set that is both CLASS Calling Number Delivery and CLASS Calling Name Delivery activated, the following CND information is delivered to the set:
  - the date and time stamp of call presentation;
  - the calling number; and
  - the calling name

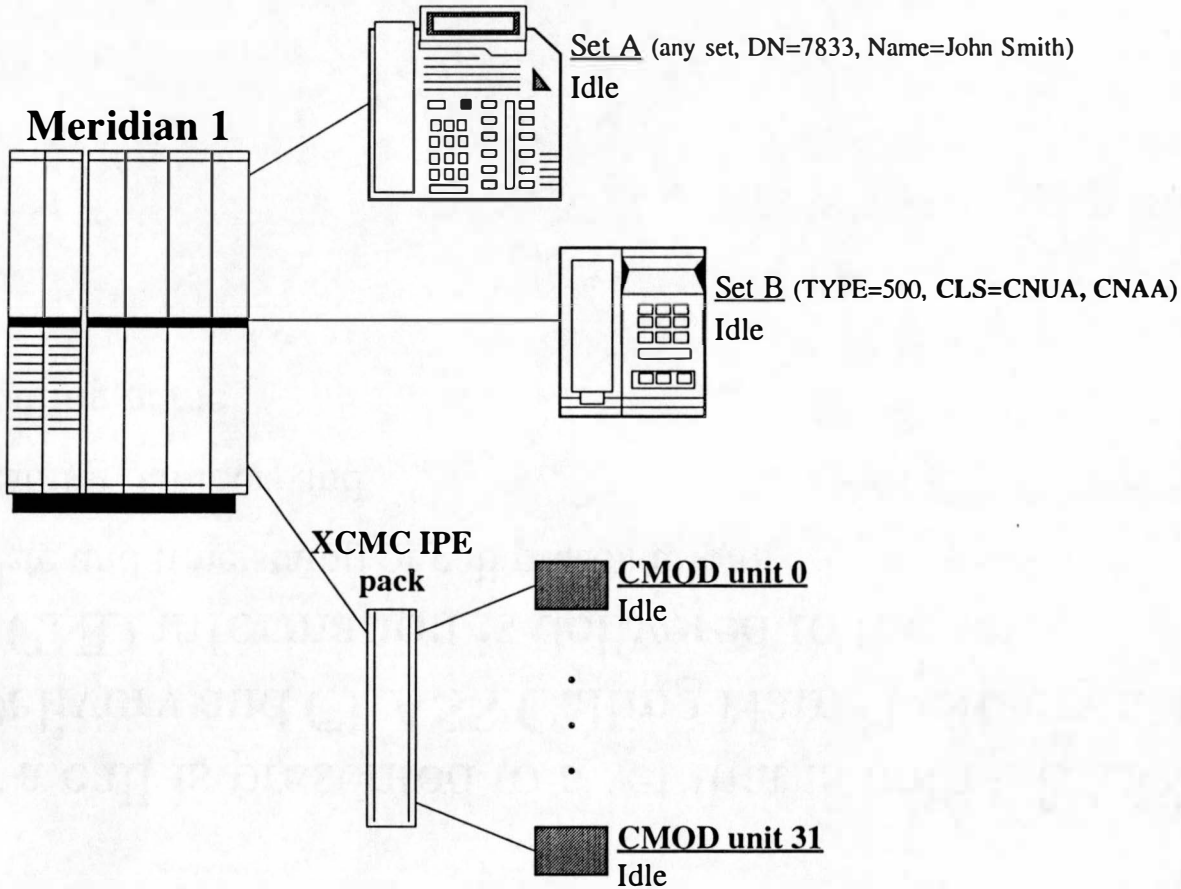

Figure 6: System Resource Allocation When CLASS Set is Idle

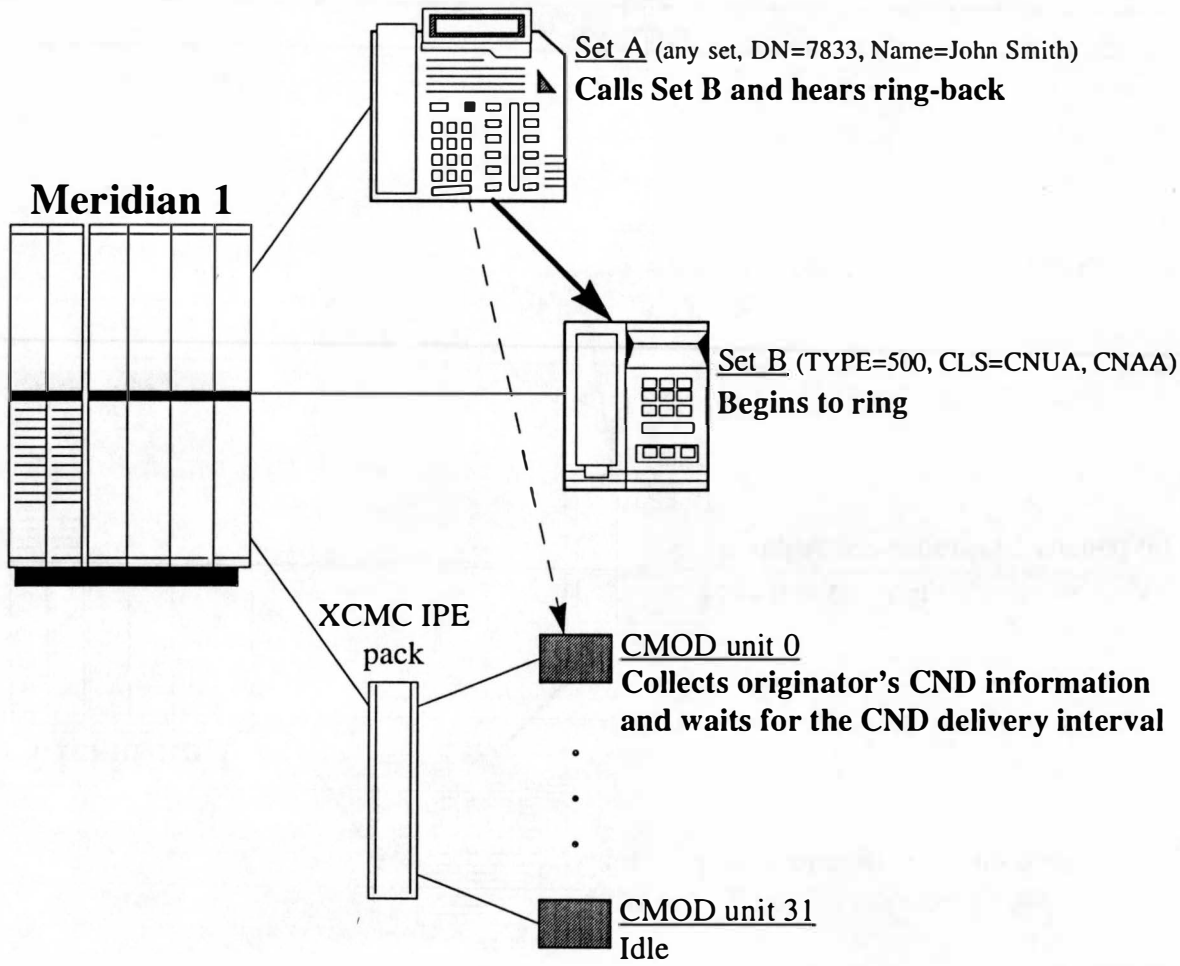

Figure 7: System Resource Allocation When a New Call Begins to Ring On CLASS Set

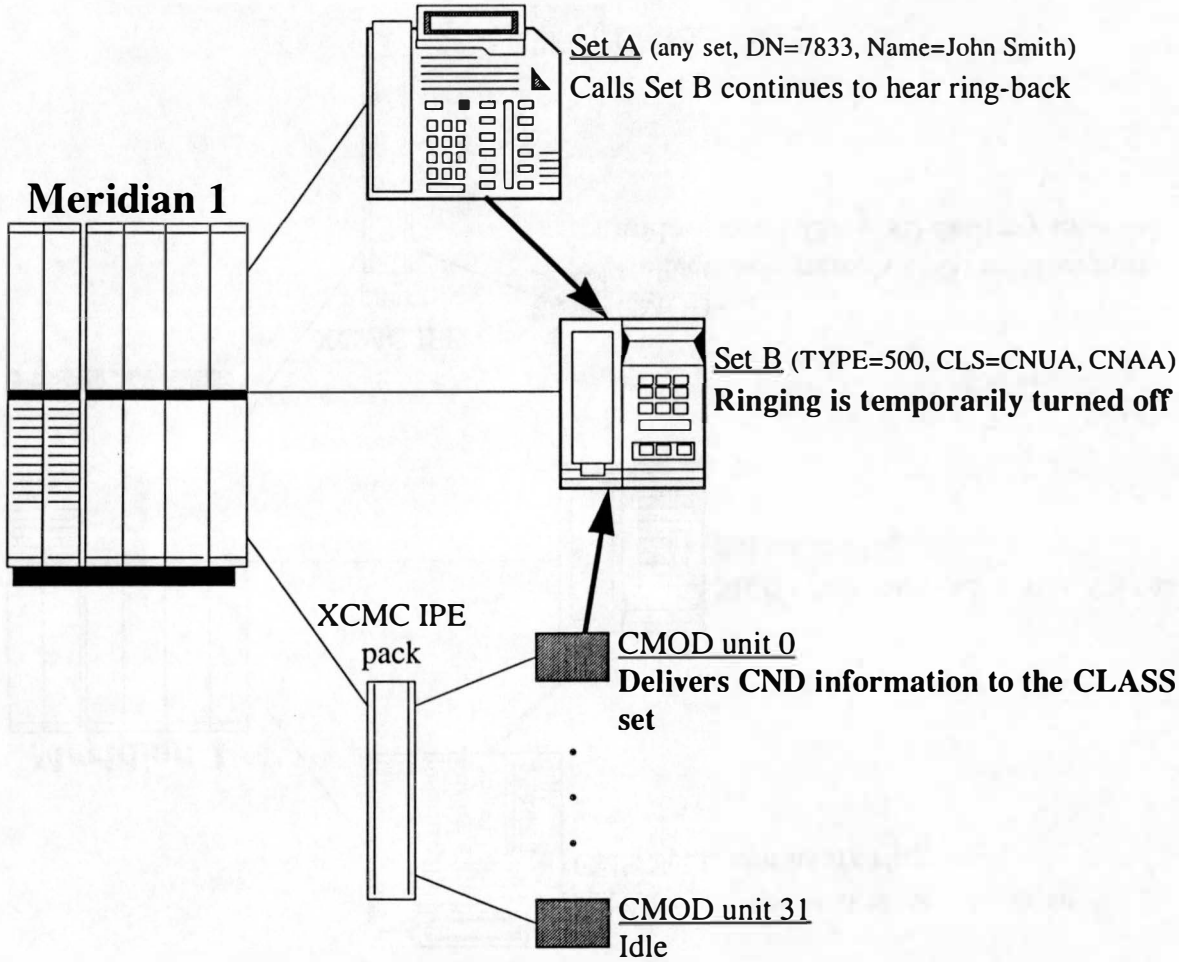

Figure 8: System Resource Allocation During CND Delivery Interval

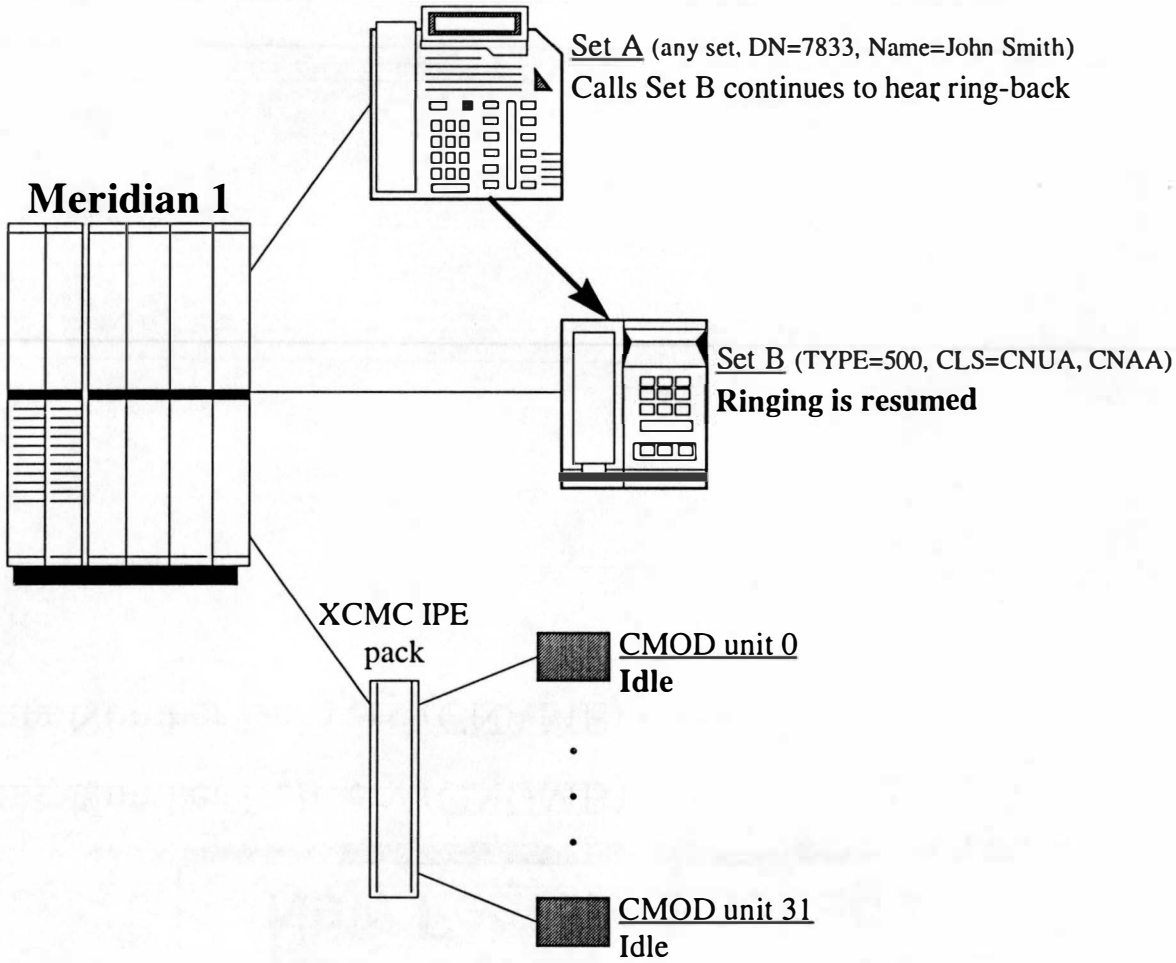

Figure 9: System Resource Allocation Once Ringing Resumes

New Feature Packages

- Calling Number Delivery (CNUMB) -332
- Calling Number Delivery (CNAME) - 333

Package Dependencies

- CPND - 95
- The CPND package is required for the Calling Name Delivery function.

Database Administration

- Overlay 10 - Single Line Telephone Administration
- Allows configuration of CLASS Calling Number Delivery and CLASS Calling Name Delivery class of services.
- Overlay 13 - Digit tone Sender and Receiver Administraion
- Allows configuration of CMOD units.
- Overlay 15 - Customer CLID Data Administration
- Allows configuration of calling number format for internal call to a CLASS set.
- Overlay 20 - TN Data Print
- Output will include the CLASS Calling Number Delivery and CLASS Calling Name Delivery class of service.
- Allows CMOD unit to be printed.

- Overlay 21 - Customer CLID Data Print
- Output will include the calling number format for internal call to a CLASS set..
- Overlay 22 - Package Data Print
- Output will include the CNUMB and CNAME package.
- Overlay 81 - Feature Print
- CLASS Calling Number Delivery and CLASS Calling Name Delivery class of service are accepted as a valid feature search key word.
- Overlay 83 - Designated TN Database Print
- Output will include the Calling Number Delivery and Calling Name Delivery class of service.

Maintenance & Diagnostic

- Overlay 30 - Network Signalling Diagnostic
- Extend network signalling diagnostic to CMOD units.
- Overlay 32 - Network and Peripheral Equipment Diagnostic
- Extend peripheral equipment commands to the CMOD card/ unit.

Other Affected Components

- M1 data conversion
- M1 call processing
- M1 data dump
- M1 database load

- NTP
  - North America Feature Listing (553-3001-912)
  - X11 Features and Services (553-3001-305)
  - X11 Input/Output Guides (553-3001-400)
  - X11 System Messages Guide (553-3001-411)

Non-networking Feature Interaction

- Attendant Call Extension
- Automatic Wake Up
- Blind Transfer
- Call Forward All Calls
- Call Forward No Answer
- Call Transfer
- Calling Line Identification Restriction for BRI Sets
- Conference/No Hold Conference
- Dial Intercom
- Direct Inward System Access
- Display of Calling Party Denied
- Distinctive Ringing

- Emergency Services Access
- Flexible Numbering Plan Package Enhancement
- Group Call
- Hotline
- Hunt
- Incremental Software Management
- Internal Call Forward
- Private Line Service
- VIP Automatic Wake Up

Networking Feature Interactions

- Feature Group D
- In-Band ANI
- ISDN
- M911 no on LA
- Virtual Network Services

Auxiliary Product Feature Interactions

- MERIDIAN ADMIN. TOOL (MAT): Configuration Management

Feature Configuration Procedures

- LD13 - CMOD Unit Configuration

Prompt	Responses	Descriptions
req	new/chg	Add or change data.
type	**CMOD**	CLASS modem unit.
tn	[*l s*] *c u*	Terminal number.

- LD 15 - Configure CLID Entries

Prompt	Responses	Descriptions
REQ	NEW/CHG	Add or change data.
TYPE	NET_DATA	Customer network data.
CUST	0	Customer number.
...	...	
CLID	YES	CLID option.
_...	...	
_entry	0	CLID entry number.
__...	...	
__lsc	408	Nation code for home national number.
__CLASS_FMT	**(DN)/** **LCL/** **NTN**	Send internal DN to a CLASS set as the calling number. Send local number to a CLASS set as the calling number. Send national number to a CLASS set as the calling number.
_...	...	

- LD 10 - CLASS Calling Number Delivery and CLASS Calling Name Delivery Class of Service Configuration

Prompt	Responses	Descriptions
req	new/chg	Add/change database
type	500	500/2500 sets.
...	...	
cls	**CNUA/**	CLASS Calling Number Multiple Data Message Format Allow.
	CNUS/	CLASS Calling Number Single Data Message Format Allow.
	(CNUD)	CLASS Calling Number Deny.
	CNAA/	CLASS Calling Name Multiple Data Message Format Allow.
	(CNAD)	CLASS Calling Name Deny.
...	...	

CP3 procesador · Motorola ·

12. Glossary
13. Hardware Overview
14. Software Overview
15. Supported Configurations
16. Conversion
17. Field Upgrades
18. Tools Required

Glossary

- CP1 - Call Processor 68030
- CP2 - Call Processor 68040
- CP3 - Call Processor 68060
- Options 1711,1811,1611 - 51C,61C,81/81C with CP1
- Options 2211,2311,1911 - 51C,61C,81/81C with CP2
- Options 2411,2511,2611 - 51C,61C,81/81C with CP3
- IOP - I/O Processor board
- IODU - combined IOP and CMDU (disk unit)
- IODU/C - IODU with CD-ROM

Glossary cont.

- FLASH - Read-only memory used for software load
- DRAM - Dynamic Random Access Memory used for SL-1 database, OS data and patches
- SRAM - Static Random Access Memory for system memory management tables and the SL-1 stack (CP2 & CP3) and processor cache on the CP1

Hardware Overview

- CP3 - processor board for M1 Options 51C,61C,81/81C.
- Memory configuration (FLASH, DRAM & SRAM) identical to CP2.
- Provides ~1.5x real-time capacity of CP2.
- All functionality and maintainance identical to CP2 boards.
- Introduces new machine types 2411,2511,2611 for 51C,61C and 81/81C systems respectively.

Software Overview

- Release 23 is upgraded from VxWorks 5.1.1 to VxWorks 5.2

  VxWorks 5.2 libraries required for 68060 support.

  Therefore the CP3 program introduces a new version of the VxWorks OS to all C-processors (including Option 11C).

- CP1, CP2, and CP3 will include semi-dynamic allocation of additional memory for Mobility based on available DRAM (similar to Option 11C implementation).

Conversions

- Upgrade to CP3 processor boards supported from C-systems only.
- Any supported software upgrade on Release 23 is supported from CP1 or CP2 to CP3.

Field Upgrades

- No flash upgrades are supported in the field (pre-installed boot code on flash) .
- Field upgrade of DRAM supported in 16 Mbyte increments.

Supported Configurations

- FLASH - 32 or 64 Mbytes
- DRAM - 16, 32 or 48 Mbytes
- Minimum configuration supported:

  32 Mbyte FLASH, 16 Mbyte DRAM (48 Mbyte system)
- Maximum configuration supported:

  64 Mbyte FLASH, 48 Mbyte DRAM (112 Mbyte system)
- CP3 supports use of IOP, IODU and IODU/C boards.

Tools Required

- All supported Maestro tools environments will be upgraded for GNU tools upissues required for VxWorks 5.2.
- No patch compatibility between CP1, CP2 and CP3. Therefore patches must be generated for the specific machines types used by CP3.
- Patcher is being updated to prompt for and check processor types.

IODU/C

27. Keycode Content
28. Keycode Delivery
29. Keycode Location
30. Feature Expansion
31. New Keycode Acceptance
32. Keycode Tools
33. Install
34. Install Floppy
35. S/W Release CD-Rom
36. Install Utility
37. Archive
38. Archive Extensions in OVL 43
39. OVL 143 - Attended Archive

40. Documentation

IODU/C Glossary

- IODU/C - I/O Disk Unit with CD-ROM
- SCSI - Small Computer System Interface
- Keycode - Digitally signed list of capabilities
- Amber - S/W Delivery program for next generation
- Dongle - Security Device used to validate Keycode
- Expansion - capability to change Customer Feature Set/ISM

IODU/C High Level Highlights

- Security via Keycode & Dongle
  replaces security module
- SW distribution on CD (a la Amber) plus install floppy
  replaces stack of floppies
- Archive onto 2 mB floppy
  includes DB splitting & compression
  replaces 4 mB

IODU/C Targets

- New Systems
- Omega upgrades to Thor
- IOP/CMDU upgrades to IODU/C
- Mix of IODU/C and IOP/CMDU is not allowed

Rel 23 runs on either IOP/CMDU or IODU/C

- Rel 23 S/W and Order Processing must support both
- Major change in Order Processing

IODU/C HW Highlights

- Based on IOP/CMDU – NT5D20
- Ethernet port
- Preserves 3x wide pack 2.5"
- New faceplate tooling
- 3 drives:
  - > **CD Rom for SW distribution (new)**
  - > **Hard Drive for Syload**
  - > **Floppy Drive (2 mB) for archive**

IODU/C Pack View

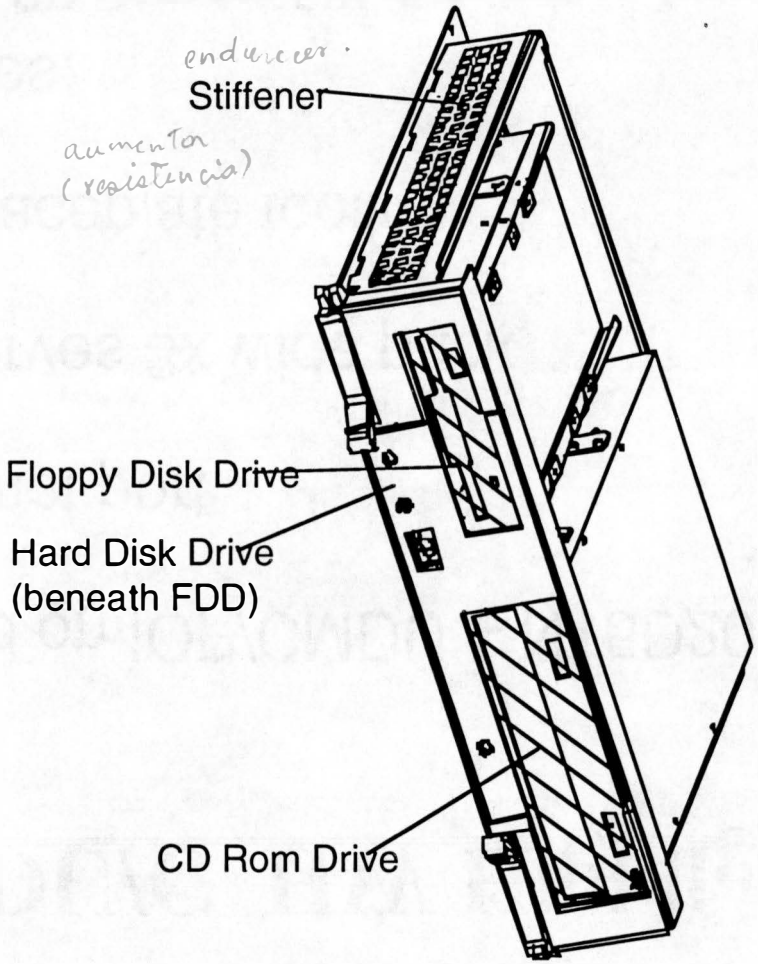

IODU/C - I/O Disk Unit with CD-ROM

1. Replaces:

4MB FD	with	2MB FD
Security Cartridge	with	Security Dongle

2. Adds:

   CD-ROM

3. Preserves:

   SCSI Architecture

   Ethernet Interface

   CP-IOP Interface

IODU/C Options

- Hard Drive + Floppy + CD
- Hard Drive + Floppy

IODU/C Vintages

- Option 1: NT5D61*A*AHD + FD + CD
- Option 2: NT5D61*B*AHD + FD

Configurations supported in Rel 23:

- Redundant Systems: Option1 + Option2
- Redundant Systems: Option1 + Option1

- **Opt51C Systems:** **Option1**

IODU/C Manufacturability

- Eliminates daughter board
- Individual ribbon cables for drives' SCSI
- 2-sided 8-layer PCB
- predominately SMT
- new, larger, stiffener
- new tooled 3x plastic faceplate

Functional Overview

IODU/C "feature" is an Umbrella for the following:

- Authorization to use S/W and Features (IODU/C only)

  Security Dongle support
  Keycode support
  Feature Expansion (without Install)

- Install Utility (IODU/C only)

  Install Utility for CD-ROM based SW
  Install Floppy S/W (Install Boot OS and Install)

- Archive (IOP/CMDU and IODU/C)

  Unattended Archive - Extensions to Ovl 43 BKO and RES
  Attended Archive

Security Dongle → batería

- DS1982U - Customized for Nortel
- Once and Forever (not replacable with each new release)
- Serves as Anchor for customer's Keycode(s)
- Mounted on IODU/C. Tested by IOP Selftest
- Field Detachable (for IODU/C replacement)
- Viewable by means of SDID command (in OVL 137)

ID0:	NT5D61BA 01NNTM18310PBL IOP
SDID0:	EC5E7000011B6789
NT SD type:	NT_STD
NT System ID:	123456789012

Keycode

- Generated per Customer's Order
- Encodes authorization to use:
  - particular S/W Release/Issue for particular Machine Type
  - set of Features and values of all ISM limits
- Is anchored against customer's Security Dongle (X 2)
- Eliminates need to produce-ship-install new Security Device
- Managed by KDS - Keycode Delivery System
  - Repository (60 days) for keycodes delivered to customers

Keycode Content

- **Keycode is an ASCII string of ~320 characters.**
  Ex.:

GQ4D35WLNH4SV4QMDYP7UN8L9HSSVSJN9DW77YPWS71LXVGCM2DCF763T0C9JMMKVEC6
3JAPHX5GRKNKY5YXAQKWYFTQTVFJGEE2W71D3DLH3HSYGHT3DDSQ74H2082E40H2081040
H2008Y04S36D1KCW0MTMPA5S734DYEXCYVSYWQYYYLY4YWT7XP17VTGF2NSQ3L6KV3D96
R6043R4R23HH3FEWEK00000000000000Q0000000000000000000000000000000000000002H0007P0
GM01K03W0000049000600200080004C = 31

- **Encodes Customer ID and Capabilities (KSHO in Ovl 143):**

System ID	: 46379
Machine Type	: 2311
S/W Version	: 2302

ISM Limits:

Loop Limit	: 160
Sys TNs Limit	: 1000
ACD Agt Limit	: 200
ACD DNs Limit	: 1000
AST Limit	: 0
DSL Limit	: 0
LTID Limit	: 96
DCH Limit	: 64
AML Limit	: 16
MPH DSL Limit	: 0
RAN CON Limit	: 0
RAN RTE Limit	: 0
MUS CON Limit	: 0

Feature Packages:
0-2 4-5 7-11 14 16-25 28-29
32-55 58-64 67 70-77 79-81 83
87-93 95 97-98 104 107-111 113-116
118-120 125 127 129 131-133 136-137
139-141 145-147 150-151 154-155 157 160
162-164 170-171 173-174 178 181 186-187
196 202-205 211 214-215 222 227-229
234 242-243 245-247 250-251 253-256 259

Keycode Delivery

Keycode Delivery System

- Keycode is extracted from KDS by means of PC-based utility
- Keycode is delivered to the site in a "keycode" file
- "keycode" file is delivered by the following means:

- on a floppy diskette

- elctronically (FTP)

- "keycode" file may be created on-site manually
  (Install Tool)

- entered manually 16 chars per line (20 lines)

  with per-line validation/correction capability

Keycode Location in the System

- Keycode is requested:

  - during Install

  - during Keycode Expansion (KNEW in OVL 143)

- Accepted Keycode is stored in "/p/install/keycode.rec"

Keycode Acceptance

- Unconditional - "installed" (Install Utility) keycode
- Conditional - "expanded" (KNEW) keycode

  becomes the Keycode of the system after trial period (similar to patch retention)

Feature Expansion

- Allows to change Features/ISM Limits within Installed S/W
- Fast Order turn-around
- Does not require Installation
- Requires Sysload to activate
- Managed by means of new OVL 143
- Activation:

- LD 143
- KNEW - conditionally accept keycode from floppy
- Sysload

New Keycode Acceptance

- Trial period for new keycode: 5 days
- Trial Keycode management (OVL 143):
  - KSTT - show status of the "trial" keycode
  - KOUT - delete the "trial" keycode
- Sanity of new keycode: less than 5 restarts during the trial
- Following trial period: 2 Keycodes in the system:
  - newly endorced keycode (keycode.rec)
  - previous keycode (keycode.old)

Keycode Tools

- **KSHO - shows selected keycode in human readable form**
- **KDIFF - compares selected keycodes in readable form**

```
ksho pend
   Machine Type  : 1811
   S/W Version   : 2302
   System ID     : 46379
ISM Limits:
   Loop Limit    : 160
   Sys TNs Limit : 1000
   ACD Agt Limit : 200
   ACD DNs Limit : 1000
   ............more limits .......
Feature Packages:
   0-2 4-5 7-11 14-25 28-29 32-55
   58-64 67 70-77 79-81 83 87-93
   95 97-98 104 107-111 113-116 118-120
   125 127 129 131-133 136-137 139-141
   145-147 150-151 154-155 157 160 162-164
   170-171 173-174 178 181 186-187 196
   202-205 211 214-215 222 227-229 234
   242-243 245-247 250-251 253-256 259
```

Install

- Driven by Install Floppy and Keycode

  3 Generic Install Floppy Diskettes:

  - Install-1 for CP-1 Machines
  - Install-2 for CP-2 Machines
  - Install-3 for CP-3 Machines
- CD-ROM contains all Workfiles for specific Release

  - machine specific Workfile is selected based on data encoded in Keycode
- Autovon and Non-Autovon CD-ROM per release

Install floppy

- Contains the following:
  - CP-specific Install OS
  - CP-specific Install Utility
  - Machine-type specific "disk.sys" - Yellow Pages for HD

S/W Release CD-ROM

- Contains all Workfiles for specific release
- Time to load HardDisk from CD-ROM: 5 minutes
- Other Install times remain unchanged

Install Utility

- User Interface - preserves IOP/CMDU Install look and feel
- Extensions:

  New tools: CD-ROM, Keycode, Dongle

  Install Duplicate Options:

  - get S/W as installed on the other HD

  - get Data Base from the other HD

Archive

- Problem: reduced capacity (2MB vs 4MB)
- Solution:

  - reuse both drives on Dual-CPU systems
  - allow for attended archive

- Additional goodies: adicional dulce.

  - each file in archive is checksummed
  - "signature" file assures completness of Archive
  - Archives are time-stamped

Extensions to Archive are applicable accross all systems in Rel 23 (either IODU/C or IOP/CMDU based)

Archive Extensions in OVL 43

- BKO

  - reuses both drives as needed

  - single floppy archive continues to use the active CMDU

- RES

  - Rel 23 Archive - searches for the "1st" diskette

  - Backward compatible with pre-Rel 23 Archives

OVL 143 - Attended Archive

- Look and feel of Install Utility
- ABKO - attended backup

- specifies number of diskettes expected
  - starts interactive procedure
  - towards the end requests to insert the 1st floppy for signature

- ARES - attended restore

- uses time-stamp to assert integrity of Archive diskettes
  - uses TEMP location on HD to store files in progress
  - assures completness and cheksum prior to endorsment

Documentation

- Install User Guide
- Archive User Guide
- Keycode Management User Guide

Music Broadcast

17.Glossary

- Broadcast Call : a call where more than one caller is listening to the same music on the one music trunk at the one time via direct one-way speechpaths.
- Broadcasting Trunk : a music trunk which has more than one caller connected and listening to the same music at the same time.
- Conference Music : the existing implementation of music via conference circuit hardware

18.Functional Overview

- This feature introduces the capability of broadcasting music within Meridian 1. A single music port may broadcast the same music to many parties simultaneously (up to 64).
- No conference hardware is necessary => reliable music since no sytem resource sharing with standard conferences
- Intergroup music is now supported => not necessary to have music trunks in each group.
- This feature is applicable to music routes only.
- The new broadcast capability can be turned on or off on a music route basis. Existing conference music and broadcast music can co-exist on the same system.

- Music broadcast is packaged in a new software package (#328).
- A new traffic report is introduced for Music Broadcast and RAN broadcast (TFC111).
- One new Incremental Software Management (ISM) limit is introduced:
  - Total Number of Music Connections Allowed on a System
  - This means that at any one time the total number of active music connections on a system cannot exceed the ISM limit.
  - A TFS message is output if a connection is disallowed because the ISM limit would be exceeded. Also the new traffic report pegs this condition.

Conference Music Configuration

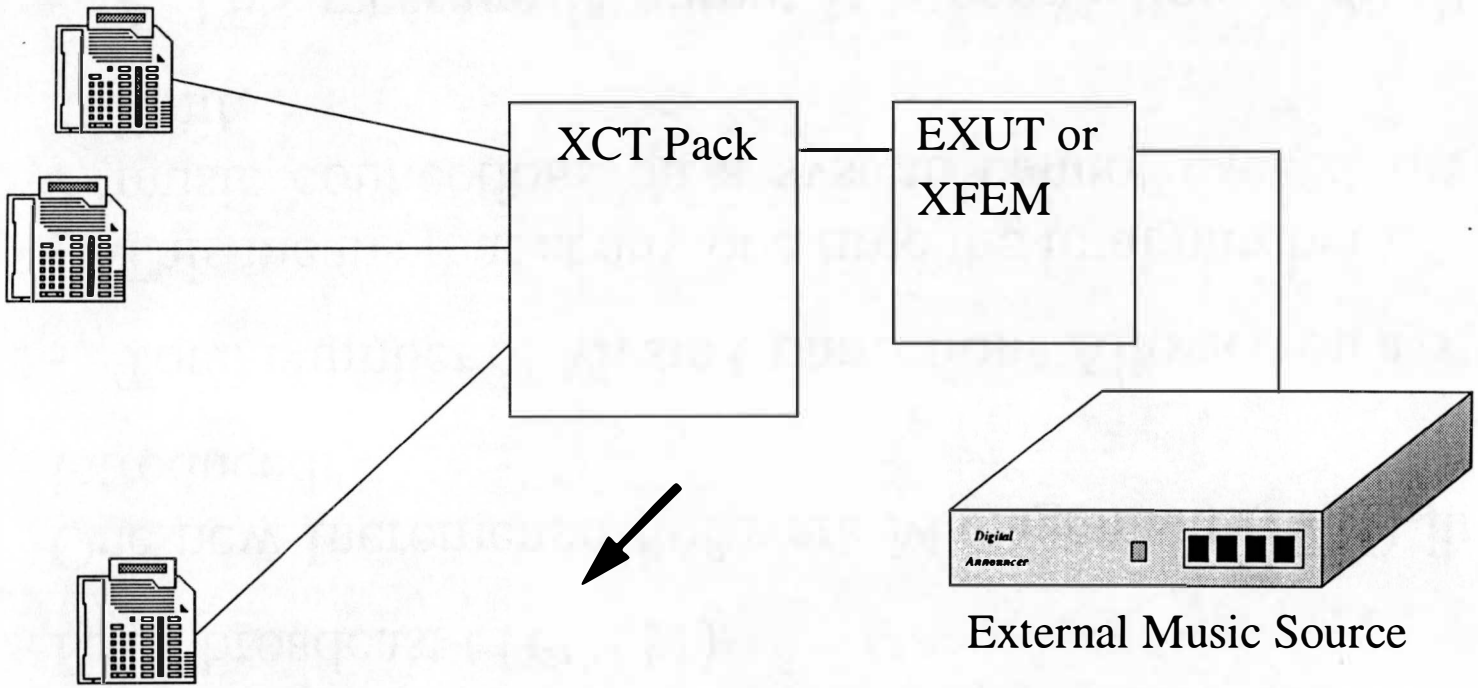

- Need conference hardware - one XCT pack can support up to 29 music calls if resources are free - need music trunks in each group and extra conference h/w may be necessary.

Integrated Music using Broadcast and MIRAN

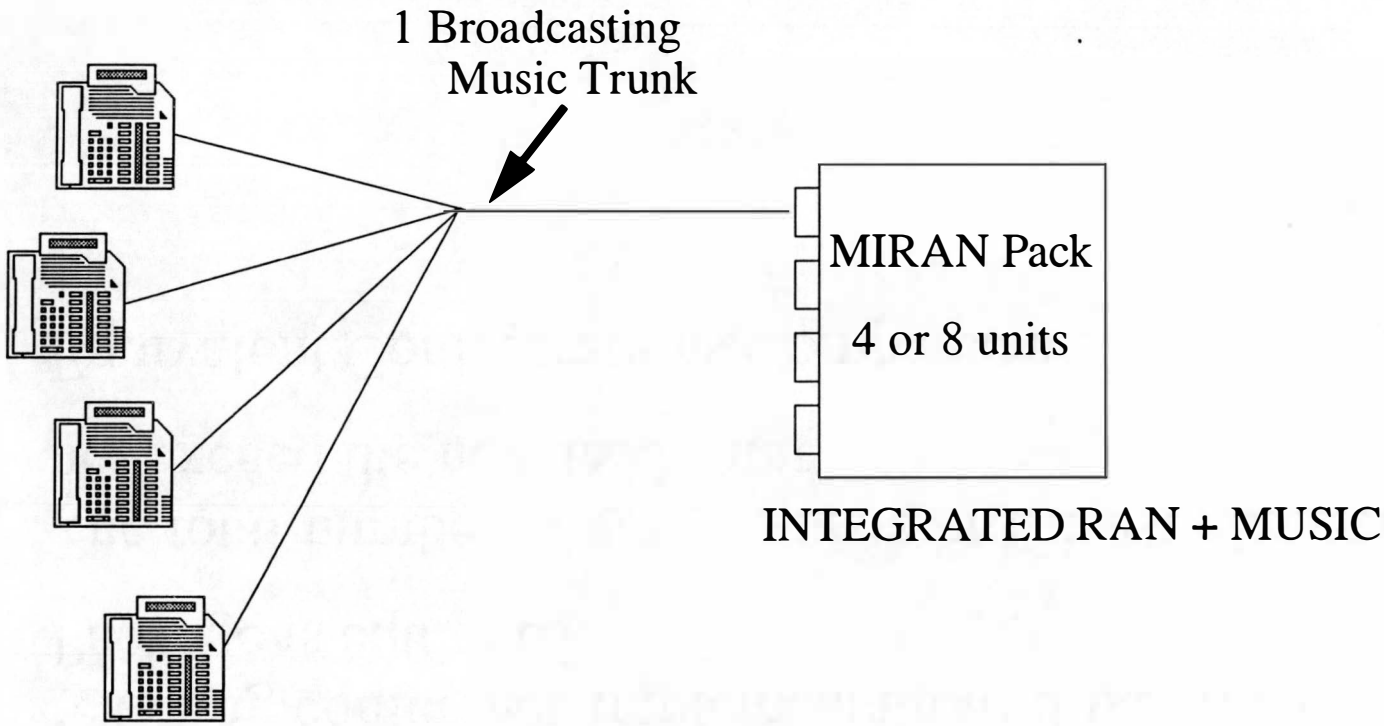

- Music Broadcast replaces conference hardware and music trunks - up to 64 calls per trunk and intergroup music.

19.Feature Set up, Activation & Deactivation

- A music route may be defined as broadcast or non-broadcast (existing conference implementation) if the Music Broadcast Package is equipped.
- The total number of active music broadcast connections can not exceed the new ISM limit.
- Equivalent Configurations Comparison:

Non Broadcasting	Broadcasting
<u>Music Route 1</u> 50 Connections: => XCT x2, Trunk Units x2	<u>Music Route 1</u> 50 Connections: 50 Ports => ISM=50, Trunk Unit x1
<u>Music Route 2</u> 100 Connections: => XCT x4, Trunk Units x4	<u>Music Route 2</u> 100 Connections: 100 Ports => ISM=100, Trunk Units x2
<u>Total</u> XCT x6, Trunk Units x6	<u>Total</u> ISM=150, Trunk Units x3

20.User Interface, Administration & Maintenance

- To define a music broadcast route configure the route as broadcast in OVL 16

Prompt	Response	Description
REQ	NEW, CHG	New, or change.
TYPE	RDB	Route Data Block.
...	...	...
TKTP	MUS	Music trunk type.
...	...	...
BDCT	**YES**	**Allow Music Broadcast for this route. NO = Deny Music Broadcast for this route. Output when REQ=NEW or CHG (for existing non-broadcasting route upgrade to broadcast)**

- To define a music broadcast trunk

Prompt	Response	Description
REQ	NEW, CHG	New, or change.
TYPE	MUS	Music trunk data block.
TN	l s c u	Terminal Number
	c u	For Option 11C.
...		
RTMB	r m	Route number, Member number

Note: CFLP prompt no longer output

21.System Messages

- SCH message to indicate that changing from a broadcast to a non-broadcast route is not allowed.
- SCH message to indicate that changing from a non-broadcast to a broadcast route while calls are active on that route is not allowed
- BUG message to indicate that a music broadcast connection list has been broken.
- BUG messages to indicate problems with low-level speechpath processing code (N/W memory, Junctors, Timeslots ...)
- SYS message to indicate that a customer has a configured music broadcast route but the Music Broadcast Package is restricted.
- TFS message to indicate that a music connection cannot be completed since the ISM limit has been reached.

22.Feature Interactions

- RAN Broadcast: the RAN Broadcast feature is applicable to RAN routes only, the Music Broadcast feature is applicable to Music routes only. However, both features share the same low level one-way speechpath processing code.

- CDR is not allowed on a Music Broadcast Route due to the number of callers that can be connected to a broadcasting music trunk at the one time.

No CDR

- ICCM: the ICCM broadcast capability on Meridian1 is independent of the music broadcast capability which is applicable only to music routes. The ICCM broadcast capability is applicable only to IVR voice ports.
  The script command GIVE MUSIC <music route number> can be used with broadcast or non-broadcast routes.

23.H/W Requirements

- Any Music Trunk - QPC..., XUT, EXUT, XFEM
  Plus an external music source

  OR

- MIRAN

24.Debugging Hints

- SNAPS in one-way speechpath processing code.

25.Other

- If there is very high inter-group traffic on a particular system then blocking may occur. In this case it may be necessary to provision extra music trunks in each group requiring music in order to prevent blocking of inter-group music connections.

RAN Broadcast

37. Glossary

- RAN: Recorded Announcement.
- Continuous RAN machine: the announcement is played over and over again.
- Start/Stop RAN machine: playback of the announcement begins when a start pulse has been received from the RAN trunk.
  Some RAN machines (level start/stop) allow to stop the message at any time.

38. Functional Overview

- This feature introduces the capability of broadcasting a recorded announcement. A single RAN port may broadcast a recorded announcement to many calling parties.
- This feature is applicable to RAN routes only.
- The new broadcast capability can be turned on or off on a RAN route basis. Existing and new implementations of RAN can co-exist on the same system.
- RAN Broadcast is packaged in a new software package (#327).

- RAN broadcast is applicable to any RAN type using any RAN packs.

- Two new Incremental Software Management (ISM) limits are introduced:
  - Number of Broadcast RAN Connections.
  - Number of Broadcasting RAN Routes.
- A new RAN queueing mode is introduced for Start / Stop RAN routes in order to maximize the usage of available RAN resources:
  - Any party needing to be connected to a recorded announcement is queued up until a predefined time/number of queued parties waiting threshold is exceeded.
  - At this point, all of the queued parties are connected to an available RAN trunk.

CONTINUOUS RAN, OLD CONFIGURATION

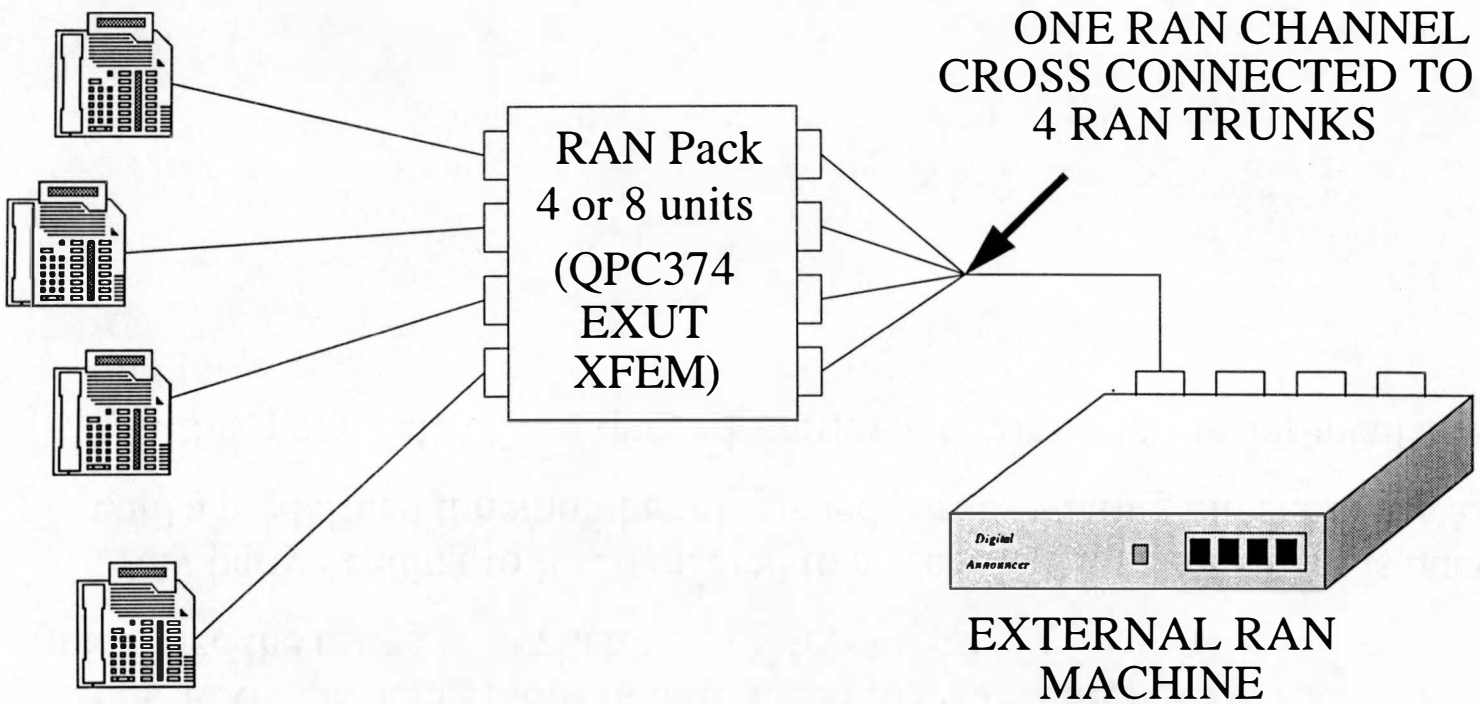

- Prior to release 23, one single continuous RAN channel may broadcast announcement by using cross connections (up to 24 cross connected trunks).

START/STOP RAN, OLD CONFIGURATION

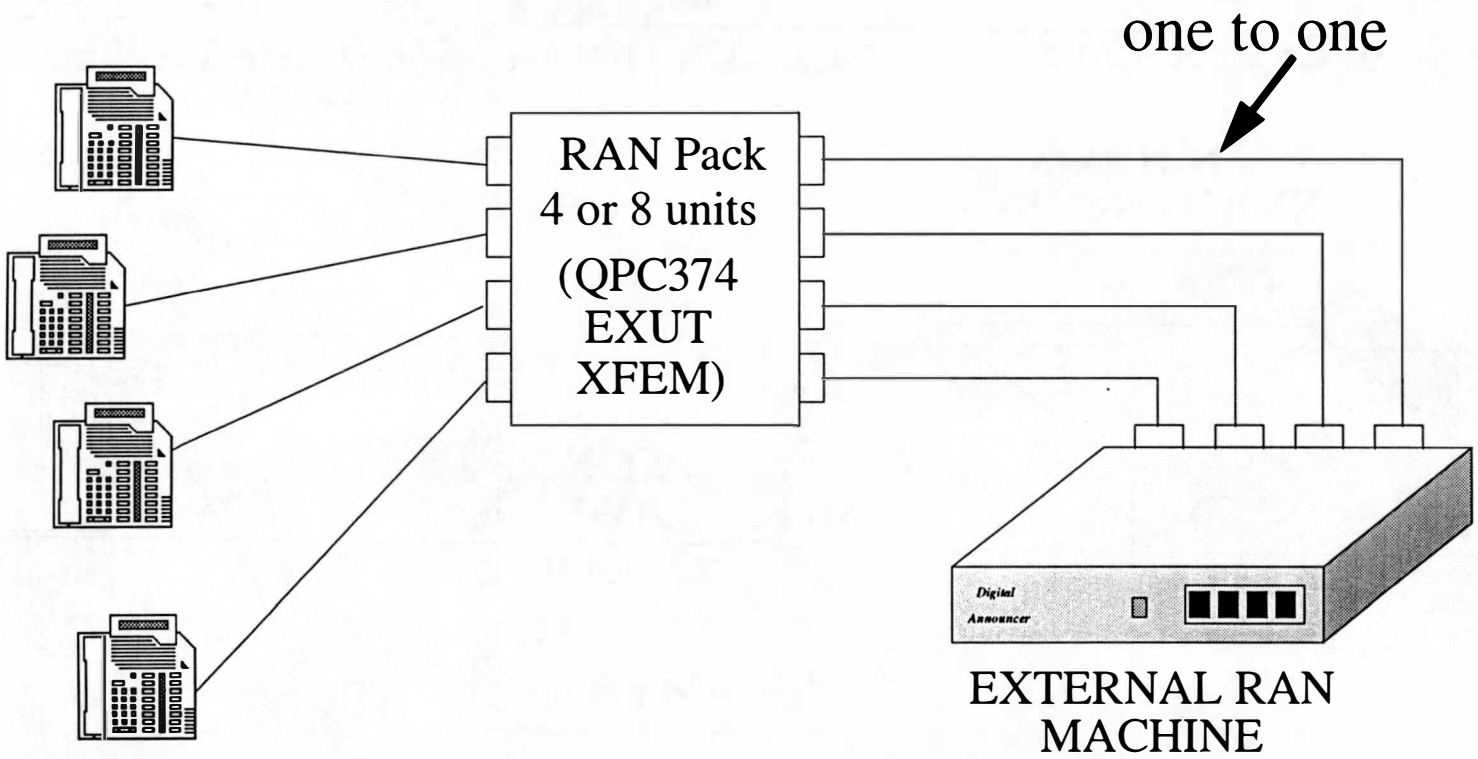

- RAN channels and RAN trunks are connected one-to-one
- Only CKM mode allows independent RAN trunks.

START/STOP or CONTINUOUS RAN, using BROADCAST

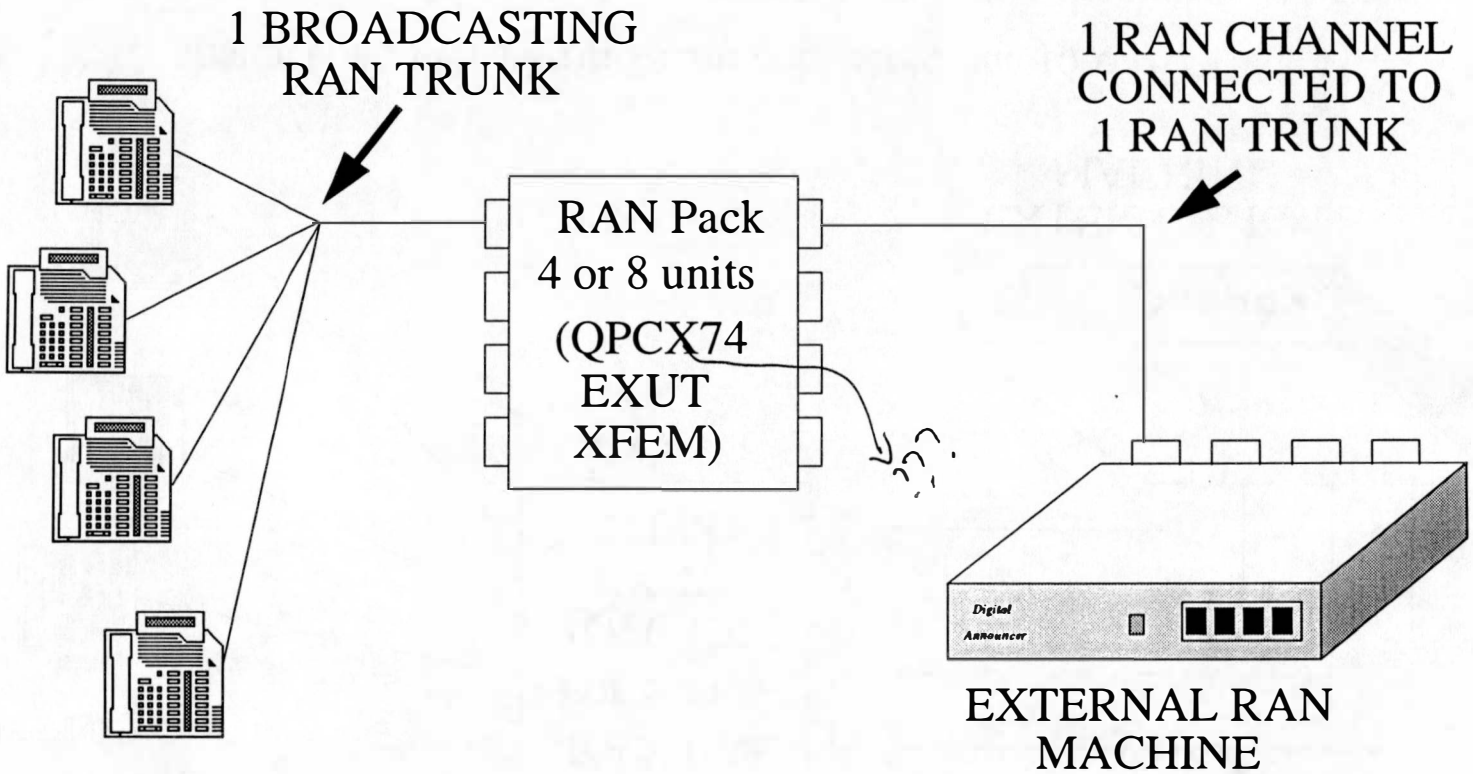

- With RAN Broadcast, 1 single RAN Channel may broadcast up to 48 calling parties using one single RAN Trunk

INTEGRATED RAN using BROADCAST

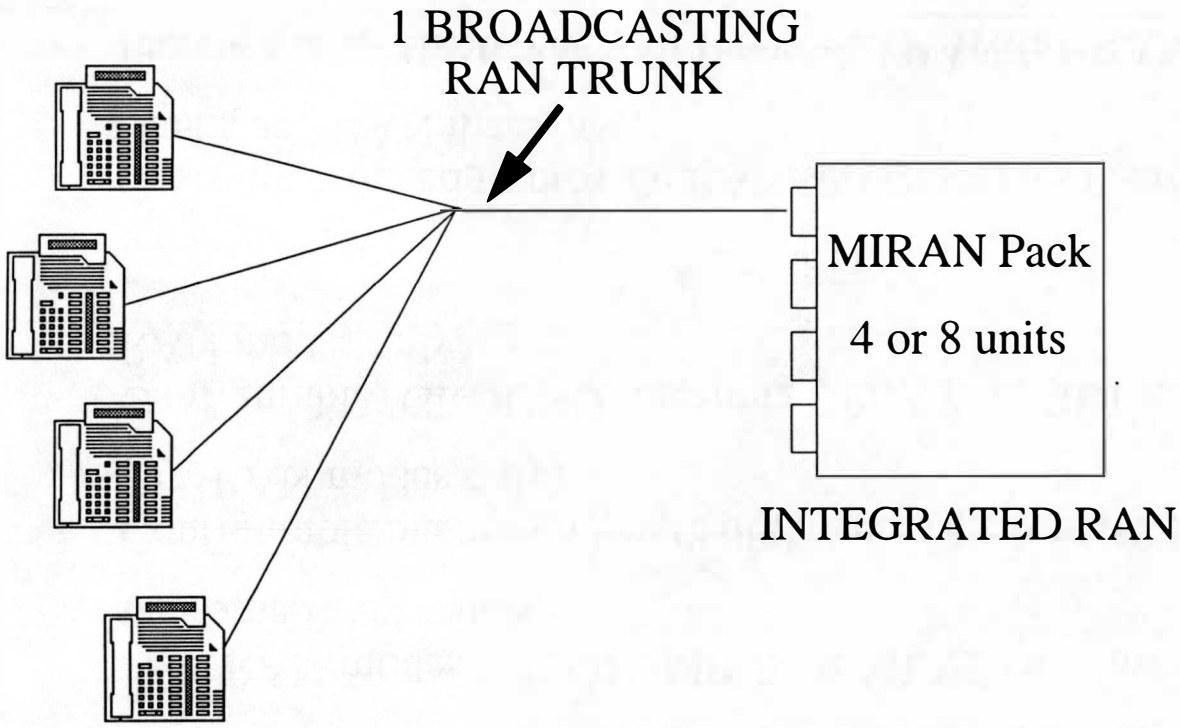

- RAN broadcast replaces cross connection with Integrated RAN.
- RAN Broadcast package introduces RAN enhancements: (applicable to both broadcasting and non broadcasting RAN routes, as far as the RAN Broadcast

package is equipped)

- Music while Waiting: when a RAN request results in a queuing call, a selected music source is provided to waiting callers. This music replaces ringback tone. Music is provided until the system locates an available RAN trunk.
- New RAN modes (MCON, MPUL & MLVL) to allow independent trunks in the same RAN routes.
- Configurable maximum length of the message (up to 2 hours, applicable to the new RAN modes only).
- Configurable 'GROUND' meaning ('PLAY' or 'IDLE', applicable to the new RAN modes only).

BENEFITS:

- Costs are reduced to provide RAN services as less hardware is needed (RAN trunks and RAN machines).
- Increase cost effectiveness of Integrated RAN (MIRAN)
- Many enhancements to the RAN feature.

39. Feature Set up, Activation & Deactivation

- A RAN route may be defined as Broadcasting or non broadcasting.
- The number of Broadcasting RAN routes on a system can not be greater than its ISM limit.
- The maximum number of connections per Broadcasting RAN trunks is configurable on a trunk basis. Maximum value is 48.
- The total number of Broadcasting RAN connections can not be greater than its ISM limit.

Equivalent Configurations

Non Broadcasting	Broadcasting
RAN Route 1: - continuous RAN - 16 RAN trunks cross connected to 1 RAN channel RAN Route 2: - Start/Stop RAN - 4 RAN trunks connected one-to-one to 4 RAN channels	RAN Route 1: - continuous RAN - 1 RAN trunk connected to 1 RAN channel (CONN = 16) RAN Route 2: - Start/Stop RAN - 1 RAN trunk connected to 1 RAN channel (CONN = 4)
Hardware: 20 RAN trunks & 5 RAN channels	Hardware: 2 RAN trunks & 2 RAN channels RAN broadcast ISM: RAN Routes: 2 RAN connections: 20 (16+4)

40. User Interface, Administration & Maintenance

- To define a broadcast RAN route:
  - configure the RAN route as broadcasting in LD 16
  - set up the max number of connections per trunk in LD 14

LD 16 – Define a broadcast RAN Route.

Prompt	Response	Description
REQ	NEW, CHG	New, or change.
TYPE	RDB	Route Data Block.
TKTP	RAN	Recorded announcement trunk type.
...	...	...
BDCT	**YES**	**Allow RAN broadcast for this route.** **NO = Deny RAN broadcast for this route.**

LD 14 – Define a RAN trunk.

Prompt	Response	Description
REQ	NEW, CHG	New, or change.
TYPE	RAN	Recorded Announcement trunk data block.
TN	l s c u	Terminal Number
	c u	For Option 11C.
...		
RTMB	1 – 126, 0 – 127	Member number, Route number.
- CONN	**(4) – 48**	**Maximum number of broadcast connections allowed for this trunk.**

Note: The CONN prompt defines the maximum number of broadcast connections allowed for a RAN trunk at any given time. As an example, if sixteen is configured, then the physical broadcasting trunk may broadcast up to sixteen callers at one time.

- For Broadcast Start/Stop RAN, Thresholds may be defined:

LD 16 – Define Thresholds for Start/Stop RAN Route:

Prompt	Response	Description
REQ	NEW, CHG	New, or change.
TYPE	RDB	Route Data Block.
TKTP	RAN	Recorded Announcement trunk type.
RTYP		Recording devices for RAN trunks where:
	CAP	Code-A-Phone
	CK2	Cook 201.
	CKM	Cook 201 multichannel.
	PUL	Pulse start/stop machine.
	LVL	Level start/stop machine.
	MLSS	Level start/stop multichannel.
	MPUL	Pulse start/stop multichannel.
	MLVL	Level start/stop multichannel.

STRT		Start arrangement.
	DDL	Call connects at the start of announcement.
BDCT	YES	Allow RAN broadcast for this route.
_TITH	**(0) - 300**	**Waiting Time Threshold (seconds)**
		Prompted only if BDCT=YES and for Start/ Stop RAN with STRT=DDL
		Default value 0 means no threshold applies
_NCTH	**(0)-100**	**Number of Calls Waiting Threshold**
		Prompted only if BDCT=YES and for Start/ Stop RAN with STRT=DDL
		Default value 0 means no threshold applies

- Music while Waiting

LD 16 – Define Music while Waiting for RAN:

Prompt	Response	Description
REQ	NEW, CHG	New, or change.
TYPE	RDB	Route Data Block.
TKTP	RAN	Recorded announcement trunk type.
...	...	...
WAIT		**Ringback**
	MUS	**Provide music for calls queuing for RAN**
	(RGB)	**Provide ringback for calls queuing for RAN**
_MRT	**0-511**	**Music route for RAN queuing.**
		MRT is only prompted for RAN route with WAIT = MUS

- New RAN Modes

LD 16 – Define new RAN modes:

Prompt	Response	Description
REQ	NEW, CHG	New, or change.
TYPE	RDB	Route Data Block.
TKTP	RAN	Recorded Announcement trunk type.
RTYP		**Recording devices for RAN trunks**
	MCON **MPUL** **MLVL**	**Continuous multichannel.** **Pulse start/stop multichannel.** **Level start/stop multichannel.**
_LGTH	**4-(60)-7200**	**Maximum message length in seconds.**
_GRD	**(IDLE)**	**If ground signal from the RAN machine, indicates that the machine is idle**
	PLAY	**If ground signal from the RAN machine, indicates that the machine is playing**

41. System Messages

Message Number	Severity	Events	Actions
SCH0051	Info	Attempt made to change a non broadcasting RAN route to broadcasting with an insufficient number of available ISM RAN connections.	customer must contact distributor to increase ISM limit
SCH0052	Info	Attempt made to change a RAN route to broadcasting or non broadcasting with active calls	Customer must take an action to not have any more active calls to any of the trunk members. Trunks may be disabled or the RAN route may be replaced by another one during the change. This last option will not disconnect any call
SCH0053	Info	Attempt made to change the maximum number of connections to a broadcasting trunk of a RAN route in overlay 16, but such a change would exceed broadcast RAN connection ISM limit	customer must contact distributor to increase ISM limit
SCH0054	Info	Attempt made to define a RAN route as a broadcast route with an insufficient number of available ISM	customer must contact distributor to increase ISM limit

Message Number	Severity	Events	Actions
SYS9037	High	Customer has configured a RAN route with data requesting the RAN broadcast package but RAN Broadcast package restricted. broadcast capability removed from route, ringback tone provided while waiting and new RAN machine types changed	Enable RAN Broadcast package. DO NOT DATADUMP, system information will be lost
SYS9038	High	Number of broadcasting RAN routes exceeds ISM limit. broadcast capability removed from route	Customer must contact distributor to increase ISM limit. DO NOT DATADUMP, system information will be lost.
SYS9039	High	Number of broadcast RAN connections exceeds ISM limit	Customer must contact distributor to increase ISM limit. DO NOT DATADUMP, system information will be lost.
SCH0064	Info	TITH value out of range (0-300)	enter an in range value
SCH0065	Info	NCTH value out of range (0-100)	enter an in range value
SCH0066	Info	CONN value out of range (4-48)	enter an in range value
SCH0067	Info	LGTH value out of range (4-7200)	enter an in range value
AUD650	Minor	TITH Call Register does not match RAN Route data	Report problem if condition persist
AUD651	Minor	TITH CR is lost	Report problem if condition persist

Message Number	Severity	Events	Actions
AUD652	Minor	RAN Broadcast Timeslice Call Register not in 128ms queue	Report problem if condition persist
AUD653	Minor	TITH Call Register not in 2S queue	Report problem if condition persist
BUG9079	Minor	Call Register idled still in RAN queue	Report problem if condition persist
BUG9080	Minor	Call Register idled still in broadcast trunk list	Report problem if condition persist
BUG9081	Minor	ORIGTN = 0 in a call waiting for RAN	Report problem if condition persist
BUG9082	Minor	TERTN = 0 in a call linked to a RAN broadcasting trunk	Report problem if condition persist
BUG9083	Minor	Data in TITH Call Register and RAN route data block does not match	Report problem if condition persist
BUG9089	Minor	The number of RAN connections available in the system is less than 0.	Report problem and reduce the number of RAN connections until the problem disappear
BUG9090	Minor	The number of RAN broadcasting route available in the system is equal less than 0.	Report problem and remove broadcasting RAN route until the problem disappear
BUG9091	Minor	RAN waiting calls list is broken	Report problem if condition persist
BUG9092	Minor	RAN trunk list is broken	Report problem if condition persist

Message Number	Severity	Events	Actions
BUG9140	Minor	Call register removed from the RAN waiting queue still in the RAN waiting call register's list	Report problem if condition persist
BUG9141	Minor	A call is connected after the RAN re-started. The beginning of the announcement could be missed.	Increase the delay between the two announcements on the RAN machine (up to 2 seconds), or reduce the maximum number of RAN connections

42. Feature Interactions

- Answer Supervision: when Music is provided when waiting for RAN (WAIT=MUS configured in overlay 16), then answer supervision is returned as if the RAN was given.
- ACD and ROA: when Music is already provided by the feature requesting RAN (second RAN for ROA and ACD for instance), the Music while Waiting configuration as no effect.
- ICCM: The ICCM broadcast capability is independent of the RAN broadcast capability which is applicable only to RAN routes.

43. H/W Requirements

- The new RAN modes, as the existing ones, are applicable to RAN units supporting it:
  - MCON: any RAN unit (QPC74, XUT, EXUT, XFEM, MIRAN) supporting Continuous RAN.
  - MPUL: any RAN unit (QPC74, EXUT, XFEM) supporting Pulse Start/Stop RAN.
  - MLVL: any RAN unit (EXUT, MIRAN) supporting Level Start/Stop RAN.
- GRD prompt exists already in LD16 but is applicable to XFEM RAN trunks only when not associated with one of the new RAN modes (MCON, MPUL or MLVL).

44. Debugging Hints

- Many SNAPs are added to debug RAN broadcast (Snap # 440 to 449, and existing 130 to 136 for RAN feature are enhanced).
- When many BUG9091 or BUG9092 are output, a INIT may be required to recover (one occurrence of the bug message is not critical as auto-recovery occurs).

45. Example of Configuration & Maintenance

Define a Continuous RAN

Prompts	Responses	Descriptions
REQ	NEW / CHG	New / Change
TYPE	RDB	Route data block
TKTP	RAN	Trunk type RAN
RTYP	DGT CON AUD MCON	Digital Continuous Audichron Continuous Multichannel
REP	1-15	Number of repetitions of RAN
POST	DIS	Disconnect after maximum repetitions
STRT	IMM	Immediately connect call to recorded announcement
WAIT	MUS	Provide music while calls queueing for RAN trunk

Prompts	Responses	Descriptions
_MRT	0 - 511	Music route for RAN queueing
BDCT	YES	Allows RAN broadcast for this route
ASUP	YES	Return answer supervision

Define a Delay Dial Start / Stop RAN route

Prompts	Responses	Descriptions
REQ	NEW / CHG	New / Change
TYPE	RDB	Route data block
TKTP	RAN	Trunk type RAN
RTYP	CAP	Code-A-Phone
	CK2	Cook 201
	CKM	Cook 201 Multichannel
	PUL	Pulse start/stop machine
	LVL	Level start/stop machine
	MLSS	Level start/stop multichannel
	MPUL	Pulse start/stop multichannel
	MLVL	Level start/stop multichannel
REP	1-15	Number of repetitions of RAN

Prompts	Responses	Descriptions
POST	DIS	Disconnect after maximum repetitions
STRT	DDL	Delay call connection until start of announcement
WAIT	RGB	Provide ringback while calls queueing
BDCT	YES	Allows RAN broadcast for this route
_TITH	(0) - 300	Waiting Time Threshold (seconds) Default value zero means no threshold applies Prompted only if BDCT=YES and STRT=DDL
_NCTH	(0) - 100	Number of Calls Waiting Threshold Default value zero means no threshold applies Prompted only if BDCT=YES and STRT=DDL
ASUP	CO	Return answer supervision, only if originator a CO trunk

Define a RAN trunk

PROMPT	RESPONSE	DESCRIPTION
REQ	NEW/CHG	
TN	<TN>	Terminal Number
type	RAN	RAN trunk
...	...	
RTMB	XX YY	Route number, Member number
_CONN	**(4) - 48**	Define the maximum number of broadcast connections allowed for this trunk. Prompted only for associated RAN route with BDCT=YES

Maximum number of connections per trunk is 48, **BUT**:

- Real Time impact may result in reducing that value dynamically.
- The CONN value should be kept below 48 depending on the System characteristics:
  - continuous RAN trunks are used with a short delay (<500ms) between two announcement.
  - Trunks within different RAN routes may behave as quite synchronous periodically.
  - Music while waiting is configured.
- Cross Connection and Broadcast feature should not be used simultaneously.

New Traffic Reports can be generated for Broadcast RAN route:

Customer Report #11:

System ID	TFC111	
Customer number	Route number	Trunk type
Successful broadcast connections peg count	Average call duration	Average waiting duration
Maximum waiting time	Waiting time threshold peg count	Number of waiting parties threshold peg count
Broadcast connections peg count for lowest usage trunk	Broadcast connections peg count for next to lowest usage trunk	Broadcast connections peg count for next to next to lowest usage trunk

TITH and NCTH Thresholds

- The thresholds TITH and NCTH should be set up to minimize the average waiting time. The waiting time threshold (TITH) should be set to the length of the message divided by the number of trunks. The number of calls threshold (NCTH) should be set to the maximum number of connections per trunk divided by the number of RAN repetitions. All trunks should have the same number of allowed connections (a small difference is allowed to use spared ISM connections). Thus, all RAN starts should be well triggered.
- In case of small RAN usage (irregular incoming rate), both NCTH and TITH should be kept at a low value.
- The TITH and NCTH threshold can be adjusted using the new TFC111 broadcast report. The difference between the number of times of TITH was met and NCTH was met give a good idea on how the system reacts to the incoming RAN request rate. In case of a high rate, a greater number of NCTH met than TITH indicates that the number of connections is insufficient.

46. Broadcast Low Level Timeslot Diagram

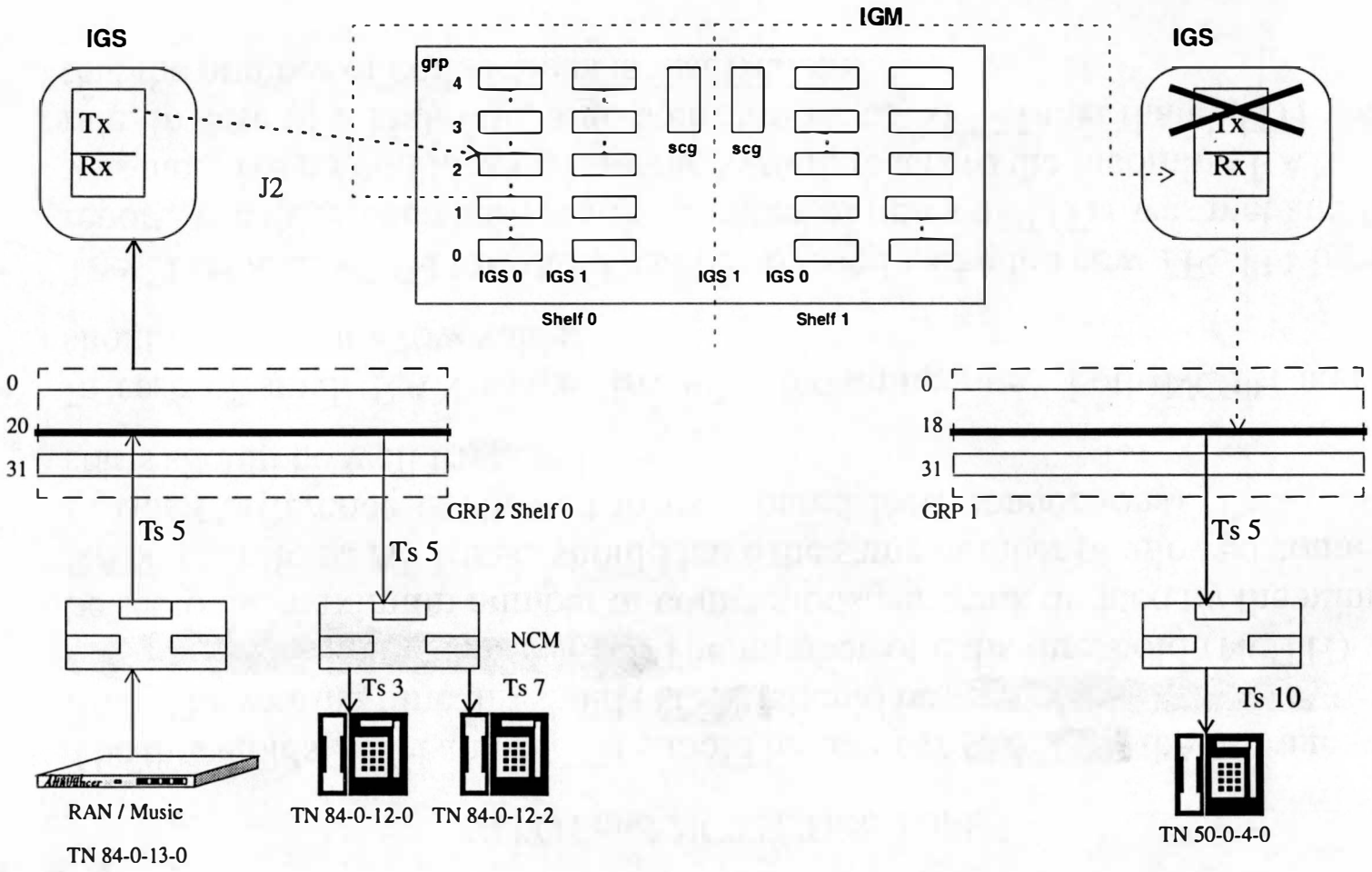

- The first call sets up the timeslot data (& junctor data if call between groups) for both the RAN and the listening party. All subsequent calls to this ran will only involve the setup of the listening party, making sure that it receives on the same timeslot as the one assigned to the RAN in the original call.
- Broadcast model based somewhat on Automatic Wake Up (AWU) strategy, except we handle junctors differently. AWU nails up junctor slots for the entire duration of RAN usage. Broadcast releases them back to system when all calls from that group are disconnected i.e. RAN machine can be still playing to other groups.

Selectable Conferee Display and Disconnect (SCDD)

Designers: Annette Lim
Henry Lang
Manager: Björn Merinder

1. Glossary

active call key	The key on which the call is established. This includes any key on which a regular Conference call can be made, (e.g., DN key, CWT, DIG, Hotline, Voice Call, Private Line and Automatic Call Distribution (ACD) In-calls key).
active conference display	The display screen of the set in an active conference.
conferee	A party or member in a conference call.
external conferee	A conferee on a trunk connected to the Meridian 1 system, where the trunk can be configured as internal or external.

internal conferee	A conferee which is a 500/2500 type set, BCS type set, attendant console or service trunk within the Meridian 1 system (e.g., RAN, paging, Music).
conference controller	The party that initializes and/or adds conferees to a conference call.
last conferee	The latest party added to the conference by any set in the conference.
simple call	A two party call

2. Functional Overview

3 or More

The Selectable Conferee Display and Disconnect (SCDD) feature is only applicable to Aries sets equipped with a display screen and conferences with three or more parties.

The SCDD feature is composed of two independent sub-features:

- ***Conference Count Display***

  While active in a conference with new CLS CDCA (Conferee Display Count allowed), the new active conference display can show the number of parties in the conference on the Aries set's screen. The format of the display is configured on a customer basis.

- ***Selectable Conferee Disconnect***

  By using the new Conferee Selectable Display (CSD) key, the Aries set user can scroll through the conferees active in the conference call. Each conferee is displayed on the CSD key user's screen. Once the CSD key is activated, the Aries set

user can selectively drop any displayed conferee.

3. Feature Set up, Activation & Deactivation

The SCDD feature is included with base packaging and is only applicable to Aries sets equipped with a display screen.

- ***Conference Count Display***

The Conference Count Display is activated on a set basis (CLS CDCA) and composed of three fields which are configurable on a customer basis:

- *Total Conferees Count* - shows the total number of parties or conferees involved in a conference and includes internal and external conferees.

- *Total Internal Conferees Count* - shows the total number of

conferees internal to the Meridian 1 system. These include 500/2500 type sets, BCS type sets, attendant consoles, or service trunks within the Meridian 1 system (e.g., RAN, paging, Music).

- *Total External Conferees Count* - shows the total number of conferees that are external to the Meridian 1 system. These includes trunks that are connected to the M1 system that can be configured on routes as internal or external.

Using a combination of the above three fields, the 8 possible display formats are shown in the following example using the default display field names.

If more than 6 parties are involved in the conference, the count is shown as "**6+**".

- Possible Display Formats of the New Active Conference Display

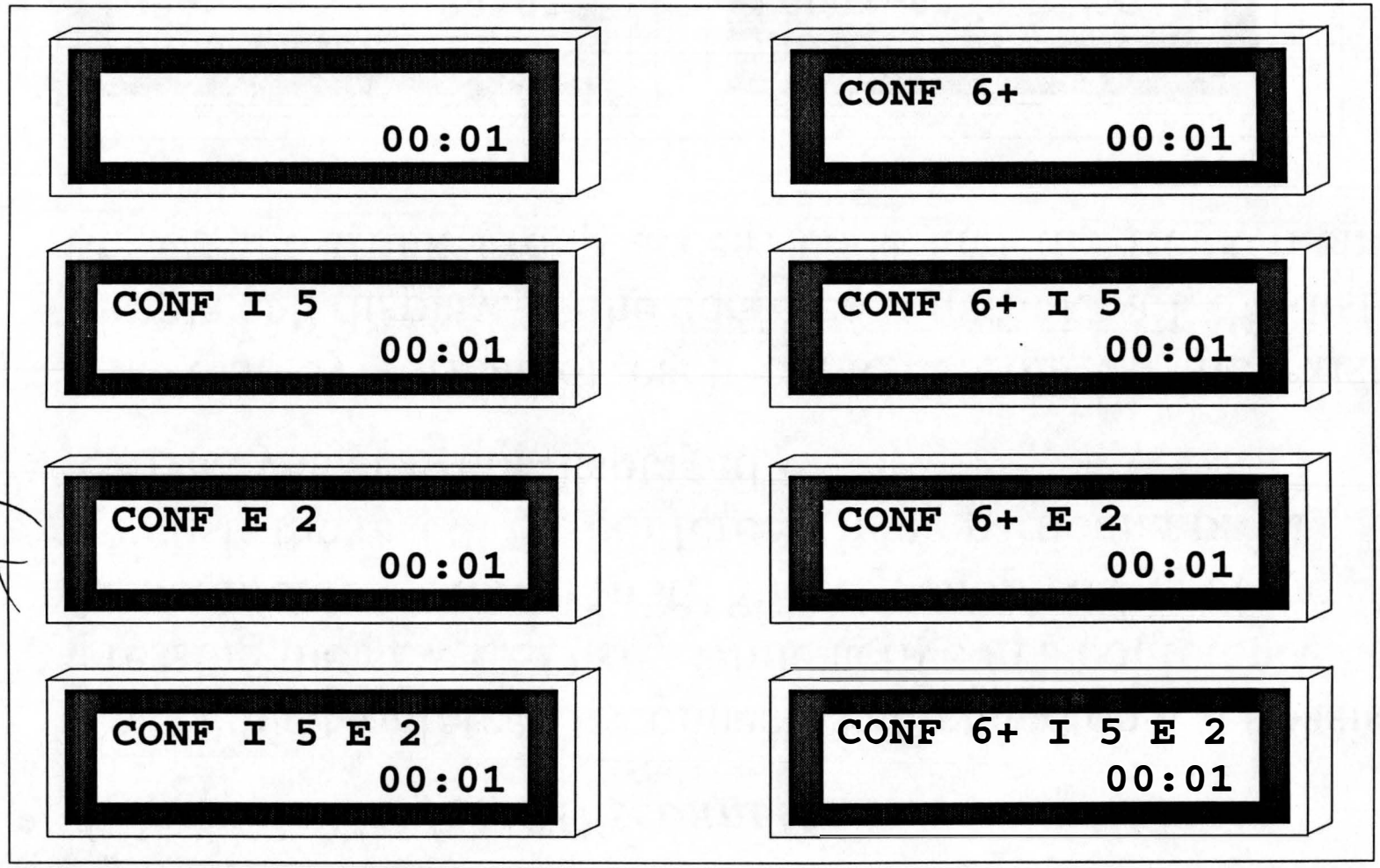

- ***Selectable Conferee Disconnect***

Selectable Conferee Disconnect is activated on a set basis by pressing the new CSD key while active in a conference. The last conferee is shown first. Subsequent pressing of the CSD key lists the rest of the conferees (in no particular order). The CSD key user is not displayed.

The display format of each conferee follows the existing simple call display. If the conferee is a trunk call, the display shows the trunk group access code and the trunk member number.

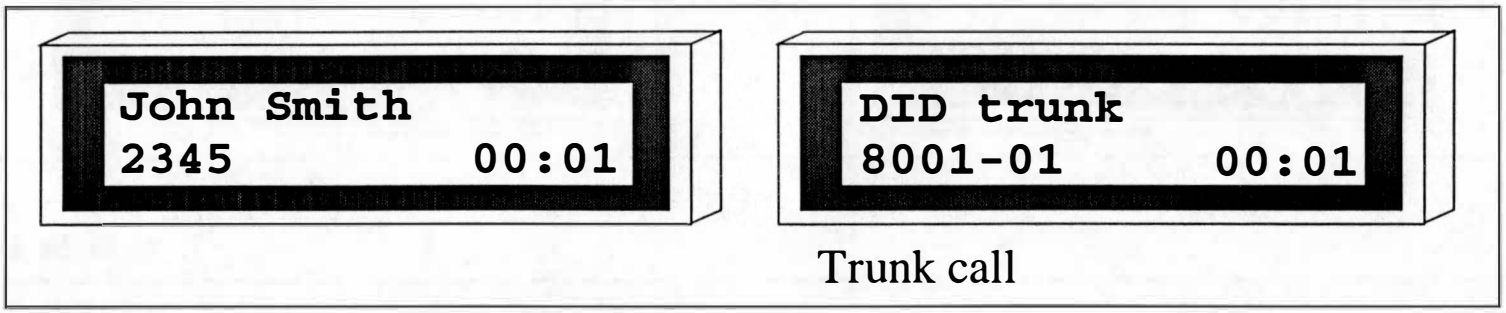

- *To Disconnect a conferee with Selectable Conferee Disconnect while active in a conference call:*

I. Press the **Conferee Selectable Display key** repeatedly until the conference party member to drop is displayed. The CSD key lamp is **lit**. The displays on other conferee sets are not changed.

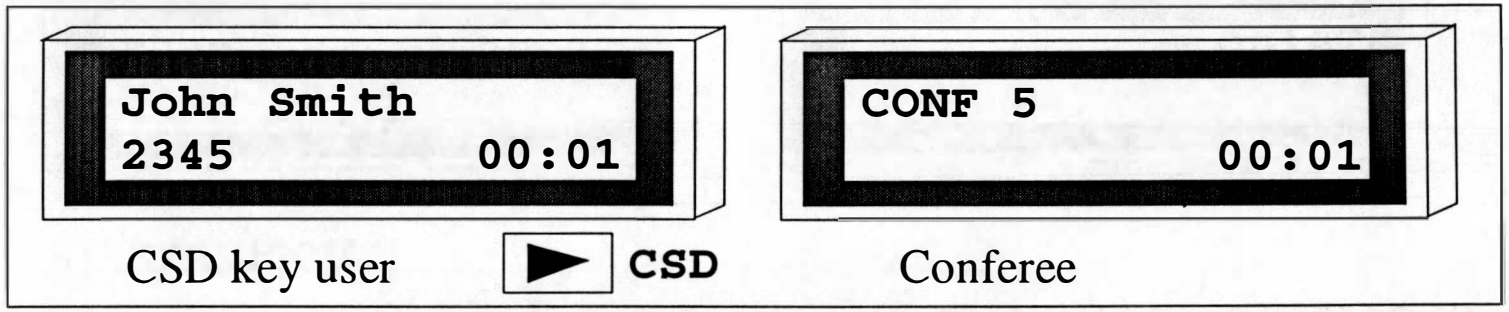

II. Press the **active call key** (where active conference is established).

a. The CSD key lamp is **dark**. The displayed conferee is disconnected.

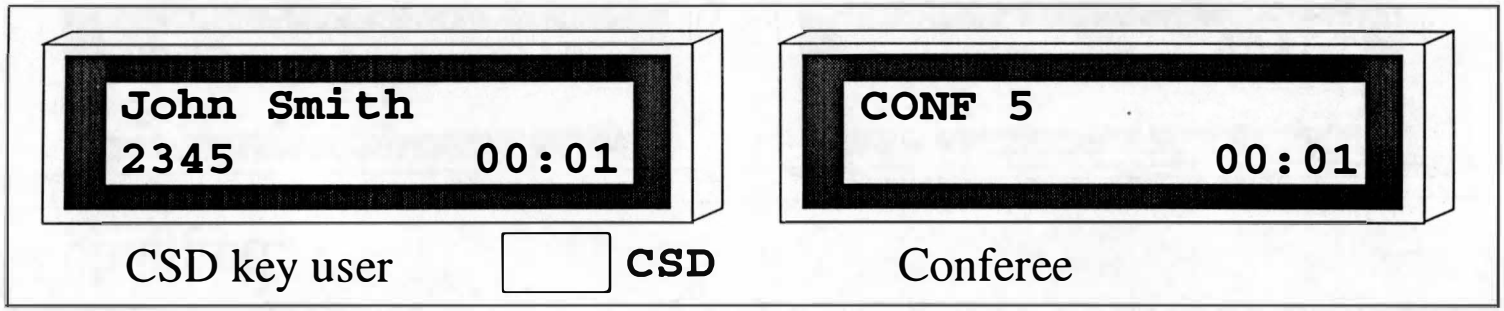

The active conference display returns showing the total count of conferees is decremented on all Aries sets in the conference with Conference Count Display enabled. The CSD key user and other conferees remain active in the call throughout the operation.

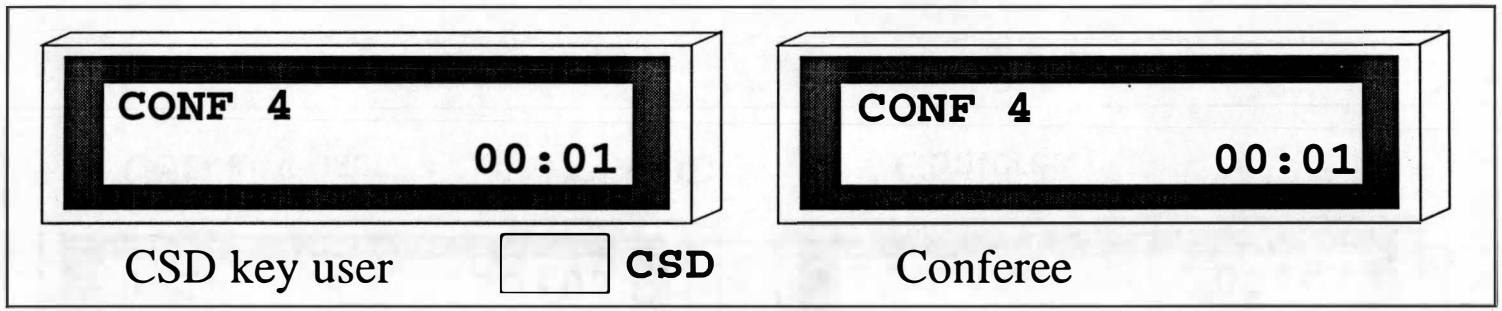

b. If the displayed conferee cannot be disconnected (e.g., Attendant console), the CSD key lamp is **flashing**. The display is unchanged and still shows the same conferee.

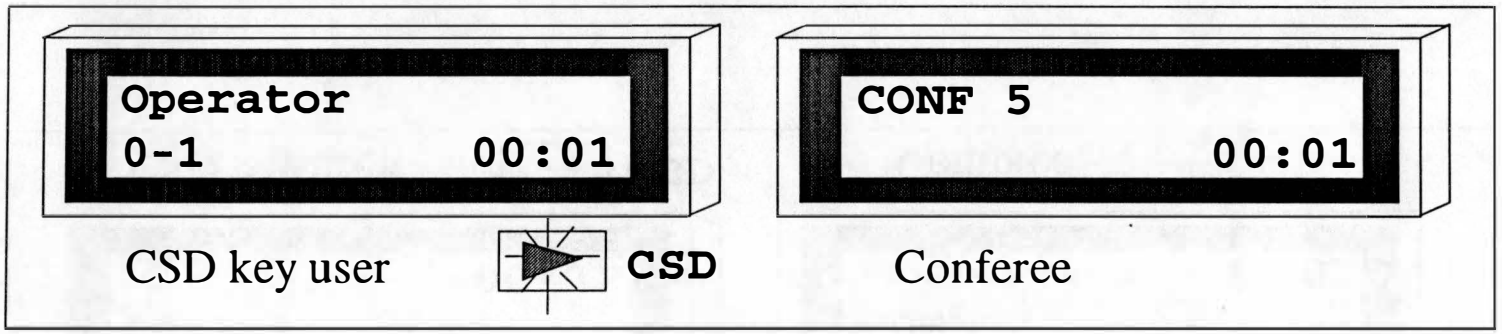

- *To Cancel Selectable Conferee Disconnect at any time after activation:*

I. Press the **Conferee Selectable Display key** repeatedly displaying conferees to drop. The CSD key lamp is **lit**. The displays on other conferee sets are not changed.

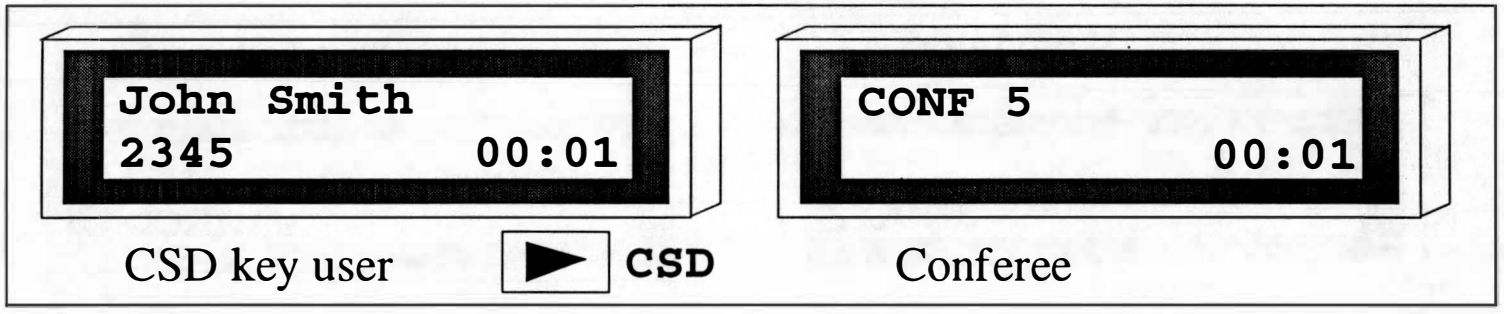

II. Press **Release** to abort the Selectable Conferee Disconnect. The CSD key lamp is **dark.** No one is disconnected. The active conference display returns. The original conference call remains active throughout the operation.

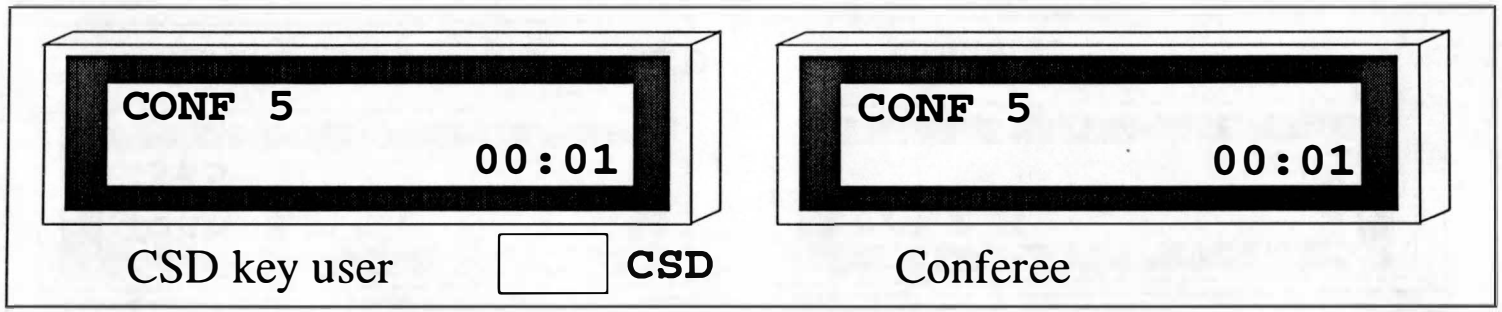

4. User Interface, Administration & Maintenance

- Overlay 11

Both the new CLS CDCA/CDCD and the new CSD key are dependent on the existing CLS ADD or DDS (Automatic Digit Display and Delay Display, respectively) and are only

applicable to Aries sets equipped with a display screen.

Table 37: Overlay 11

PROMPT	RESPONSE	DESCRIPTION
REQ	NEW/CHG	Add a new set or modify an existing set.
TYPE	aaaa	Aries sets equipped with a display screen. aaaa = 2008,2016,2216,2616.
TN	l s c u cc uu	loop, shelf, card and unit (Terminal Number). card and unit for Option 11C.
...	...	

Table 37: Overlay 11(Continued)

PROMPT	RESPONSE	DESCRIPTION
CLS	**(CDCA) /**	**Conferee Display Count Allowed CLS, the default value for new Aries sets with a display enables the display to show the total number of conferees in a conference call following the Conference Count Display CDB format.**
	CDCD	**Conferee Display Count Denied CLS to have a blank display during a conference call.**
...	...	
KEY	**CSD**	**Conferee Selectable Display key, enabling the Selectable Conferee Disconnect sub-feature.**

- Overlay 15

  For the new active conference display, there are three new fields to be configured:

  - Total Conferees Count display field
  - Total Internal Conferees Count display field
  - Total External Conferees Count display field

  A blank screen can be configured if all three Conference Count Display field options are set to NO.

Table 38: Overlay 15

PROMPT	RESPONSE	DESCRIPTION
REQ	NEW/CHG	Define or modify customer data block
TYPE	CDB/ FTR_DATA	Customer Data Block Change Features and Options
CUST	0-99	Customer number
...	...	
CONF_DSP	**YES/(NO)**	**Gateway to change the new Conference display configurations.**
-CNFFIELD	**YES/(NO)**	**Display the total number of conferees.**
-CNF_NAME	**aaaa / (CONF) /<cr>**	**Conference Count Display field name[a]; 1-4 alphanumeric characters**
-INTFIELD	**YES/(NO)**	**Display the total number of Internal conferees.**

Table 38: Overlay 15(Continued)

PROMPT	RESPONSE	DESCRIPTION
--INT_NAME	aaaa / (I) / <cr>	Internal conferees count display field name; 1-4 alphanumeric characters; Prompted only if INTFIELD=YES.
-EXTFIELD	YES/(NO)	Display the total number of External conferees.
--EXT_NAME	aaaa / (E) / <cr>	External conferees count display field name; 1-4 alphanumeric characters; Prompted only if EXTFIELD=YES.

a. The Conference Count Display field name (new prompt CNF_NAME) serves a dual purpose. If the Total Conferees Count display field is enabled (new prompt CNFFIELD=YES), the Conference Count Display field name is followed by the total number of conferees in the conference on the Aries set's display screen.

If the Total Conferees Count display field is disabled (CNFFIELD=NO) and at least one of the other conference display field options is enabled (new prompts INTFIELD or EXTFIELD), the Conference Count Display field name indicates that the following internal and/or external counts on the Aries set's display screen are for a conference.

tiene que ver con el ODAS

- Overlays 20, 21, 71, 81 and 83

  The print routines in these overlays are modified for the new prompts and responses introduced in Overlays 11 and 15.

5. System Messages

   No new system messages are introduced. Existing messages are used for service change errors.

6. Feature Interactions

- The Selectable Conferee Display and Disconnect feature is not dependent on the method/feature used to add a conferee to the conference. These features are not changed by the SCDD feature and include the following:

  - Attendant Barge-in

- Attendant Break-in
- Bridging
- 3-party and 6-party Conference
- Multi-Party Operations (MPO):
  Call Join and Three Party Service
- No Hold Conference (NHC)
- Override (OVR)
- Priority Override (POVR)
- Privacy Override (POA)

- When displaying the other conferees to the Conferee Selectable Display (CSD) key user, the display of each party in the conference (including trunks) follows the existing simple or two-party call display. No changes are made to the features which supply and/or display this data. These features include the following:
  - Called Party Name Display (CPND)
  - Calling Party Privacy (CPP)
  - Dialed Number Identification Service (DNIS)
  - Digit Display
  - Displayed Calling Party Denied
  - ISDN Calling Line Identification (CLID)

- In addition to the previous conference and display features, the following features also interact with the SCDD feature. Please read the FS for more details.
  - Attendant
  - Automatic Call Distribution (ACD)
  - Automatic Hold / Hold
  - Call Waiting (CWT)
  - Dial Intercom (DIG)
  - Digitone Receiver (DTR)
  - Display Key (DSP)
  - End-to-End Signaling (EES)

- Flexible Trunk-to-Trunk Connections (R23)
- Group Call (GRC)
- Hotline (HOT)
- Integrated Services Digital Network (ISDN)
- Basic Rate Interface (BRI)
- Private Line
- Tone and Digit Switch (TDS)
- Voice Call (VCC)
- Application Module Link (AML) / MERIDIAN LINK
- MAT/SMP: Configuration Management

7. H/W Requirements

The SCDD feature is only applicable to Aries sets equipped with a display screen.

8. Tools Needed

N/A.

9. Debugging Hints

A new global procedure SCDD_HANDLER is introduced to handle the call processing for the Selectable Conferee Display and Disconnect feature.

NORTEL
NORTHERN TELECOM

Enterprise Networks

FIELD INTRODUCTION PRESENTATION

New Product Introduction

- Overview
- Gating Process
- Typical Time Line

Field Introduction

- Objectives
- Expectations
- Escalation Procedures
- Support Contacts

122096

New Product Introduction - Overview

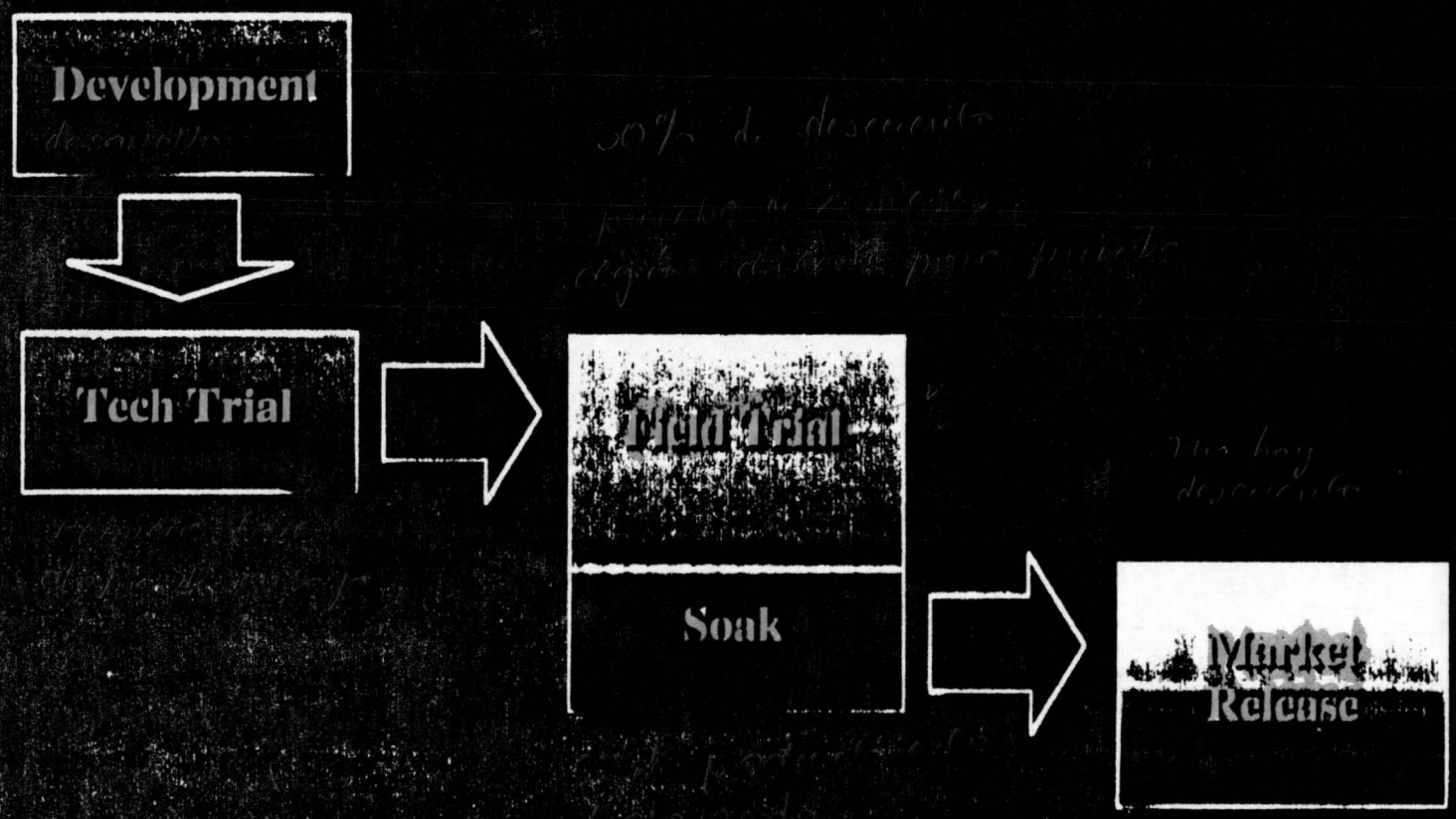

New Product Introduction - Gating Process

GATE 0:
Launch?

GATE 1:
Proceed with the design?

GATE 2:
Ready for end-user trial?

GATE 3:
Ready for release?

Definition Phase
- Market Analysis
- Requirements
- Specifications
- Funding

Development Phase
- Design
- Coding
- Unit Testing
- Integration Testing
- Verification Testing
- Tech Trial

Deployment Phase
- Soak
- Out-Of-Box Testing

NORTEL
NORTHERN TELECOM

Typical Time Line

Enterprise Networks

New Product Introduction - Typical Time Li

Note:

- Last 30-60 days of Field Trial overlaps with Soak
- Selected Field Trial sites may be turned into Soak sites
- Other Soak sites may be loaded by Field Trial or ETAS/CTAS

122096

New Product Introduction - Typical Time Line

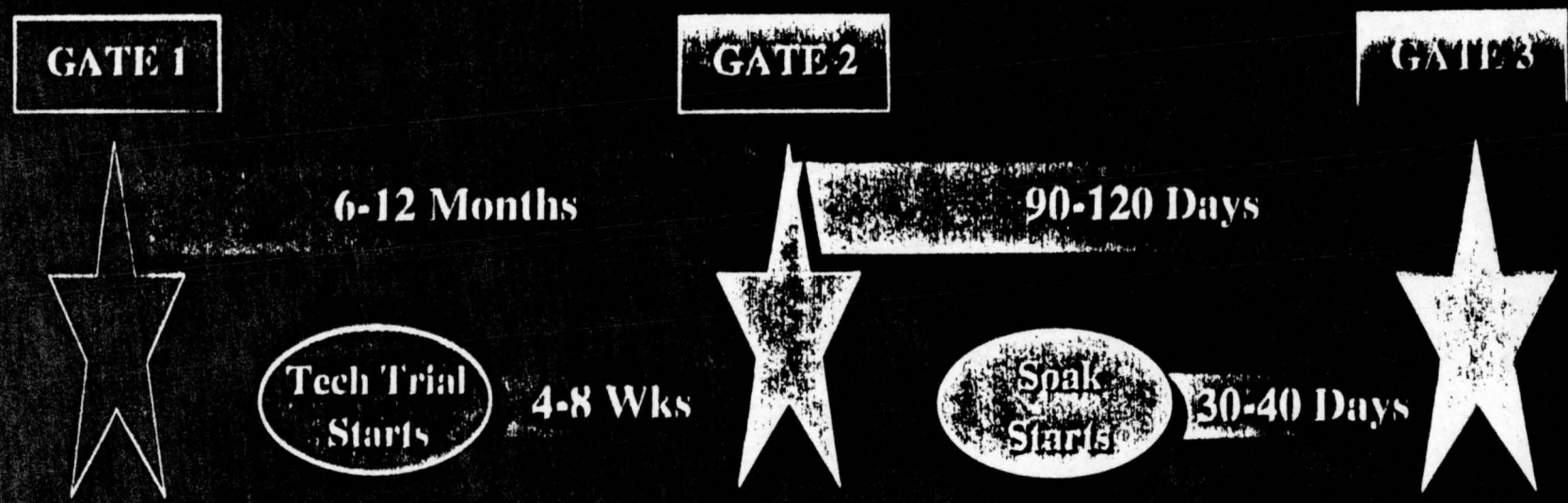

Note:

- Last 30-60 days of Field Trial overlaps with Soak
- Selected Field Trial sites may be turned into Soak sites
- Other Soak sites may be loaded by Field Trial or ETAS/CTAS

Field Introduction - Objectives

- Installation and testing of new products in a live customer environment
- Evaluation of installation, maintenance and functionality of new products
- Use and evaluate the accuracy of the new product documentation (NTPs, User Guides, etc.)
- To ensure no degradation to existing system as a result of new product introduction
- To determine customer satisfaction as to the ease of use, functionality, and effectiveness of the new product

Field Introduction - Expectations

Field Trial Customer is Expected to:

- Schedule and participate in the new product installation
- Use and evaluate the new product documentation
- Monitor the operation of the new product in a live environment
- Provide feedback to the NT field trial engineer on the new product and documentation in a timely manner
- Schedule frequent upgrades of the new product during the field trial period

NORTEL
NORTHERN TELECOM

durante el field trail no es necesario llamar a CITAS.

Enterprise Networks

Field Introduction - Escalation Procedure

End User

Distributor Support

- Report problem timely and accurately
- Maintain site log
- Install upgrades timely

Field Trial Engineer

- Evaluate problem report
- Submit problem to development/designers
- Track problem from entry to resolution
- Provide up-issues to sites
- Provide installation and upgrade support

Development

- Resolve problem
- Integrate resolution
- Release upissue

122096

Line-side E1 Interface (LEI)

TECHNOLOGY TRANSFER
March 21, 1997

Presented by:
Telecom Strategies Inc.,
Mission Park

Product Objectives

- Line-side E1 Interface Circuit Card (LEI)
- Provide Cost-Effective E1 Interface To Line Side Of Meridian 1
- Improve Method Of Connection To E1-Based Ancillary Equipment
- Provide Access To Small Remote Locations
- Full Compliment Of E1 Monitoring And Diagnostic Capabilities

Configuration

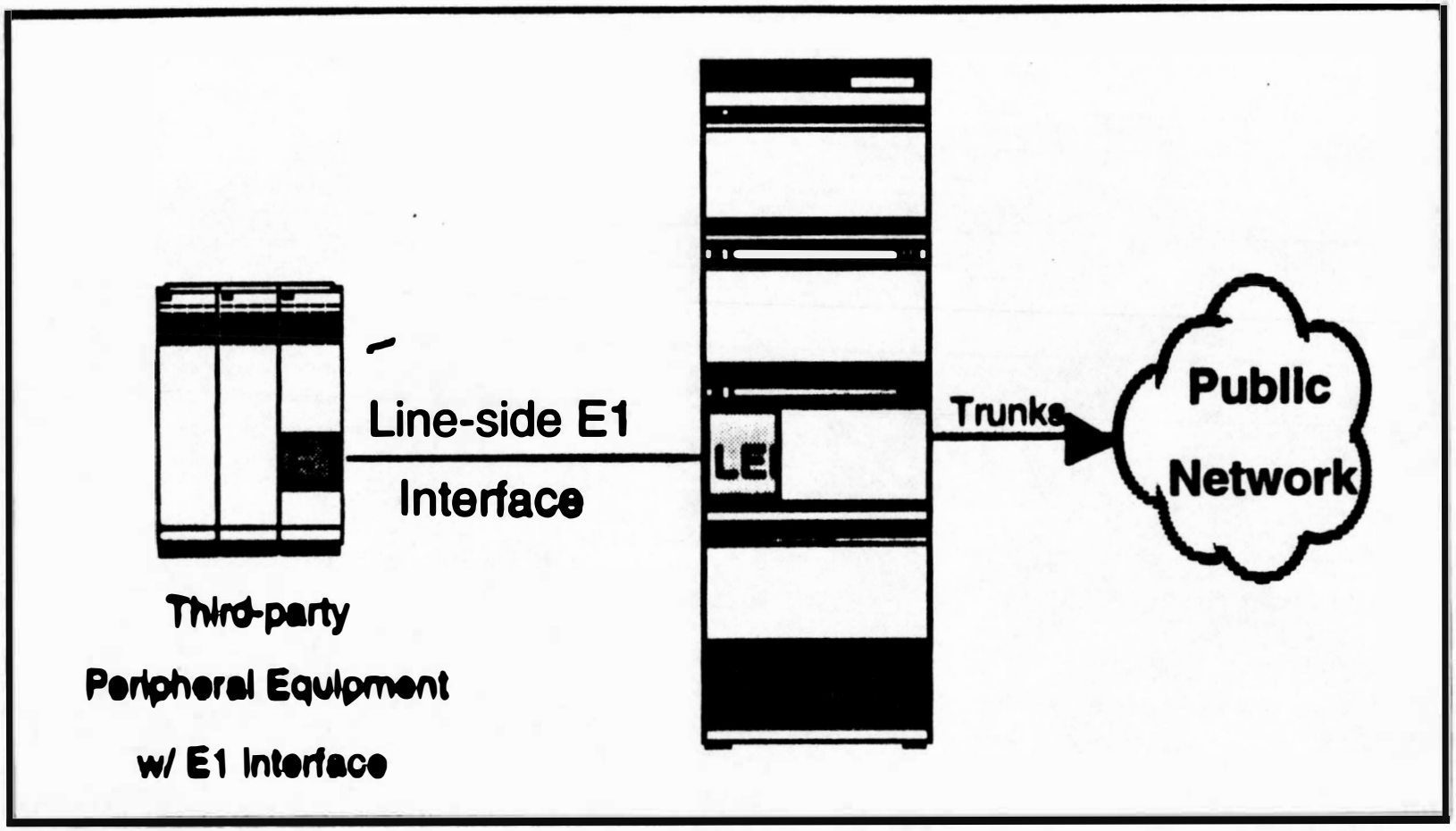

Product Overview

- One Double-Wide Circuit Card Provides Full E1 Access To IPE
- Installs In Any Intelligent Peripheral Equipment (IPE) Card Slot
  - Requires Two Consecutive Slots
  - 16 TN's Available On Motherboard
  - 14 TN's Available On Daughterboard
- Emulates Two Analog Line Cards (ALC) to X11 Software

Product Overview

- Full ALC Functionality Available To E1 Equipment
  - Acts As A Line, Not A Trunk
    - Hook Flash
    - SPRE Codes
    - Ringback Tones
- Enhanced Functionality Over Analog Line Card
  - Distant End Disconnect Feature (Supervised Analog Lines) introduced in X11 Rls 21 Software Fully Supported
  - Selectable Interface Protocol
    - Loop Start
    - Pseudo-Ground Start
      - Glare Potential On M-1 Outbound Calls

Product Overview

- Powerful E1 Line Monitoring And Diagnostic Capability
  - Separate MMI Port For E1 Link Maintenance
    - Not Required For Normal Operation
    - Daisy Chain Cable For Multiple LEI Maintenance
- Interfaces Up To 500 Miles Before Echo Cancellers Are Required
- Uses Channel Associated Signalling (CAS)

Product Applications

- Use Anywhere E1 Compatible Equipment Needs To Attach To Line-side Of Meridian 1
  - E1 Compatible IVR Equipment
  - E1 Compatible VRU Equipment
  - E1 Compatible Turret Systems
  - E1 Compatible Wireless Systems
  - Remote 2500 Sets Through E1 To Channel Bank
  - Remote Norstar Sites Behind Meridian 1 Over E1

Application Example

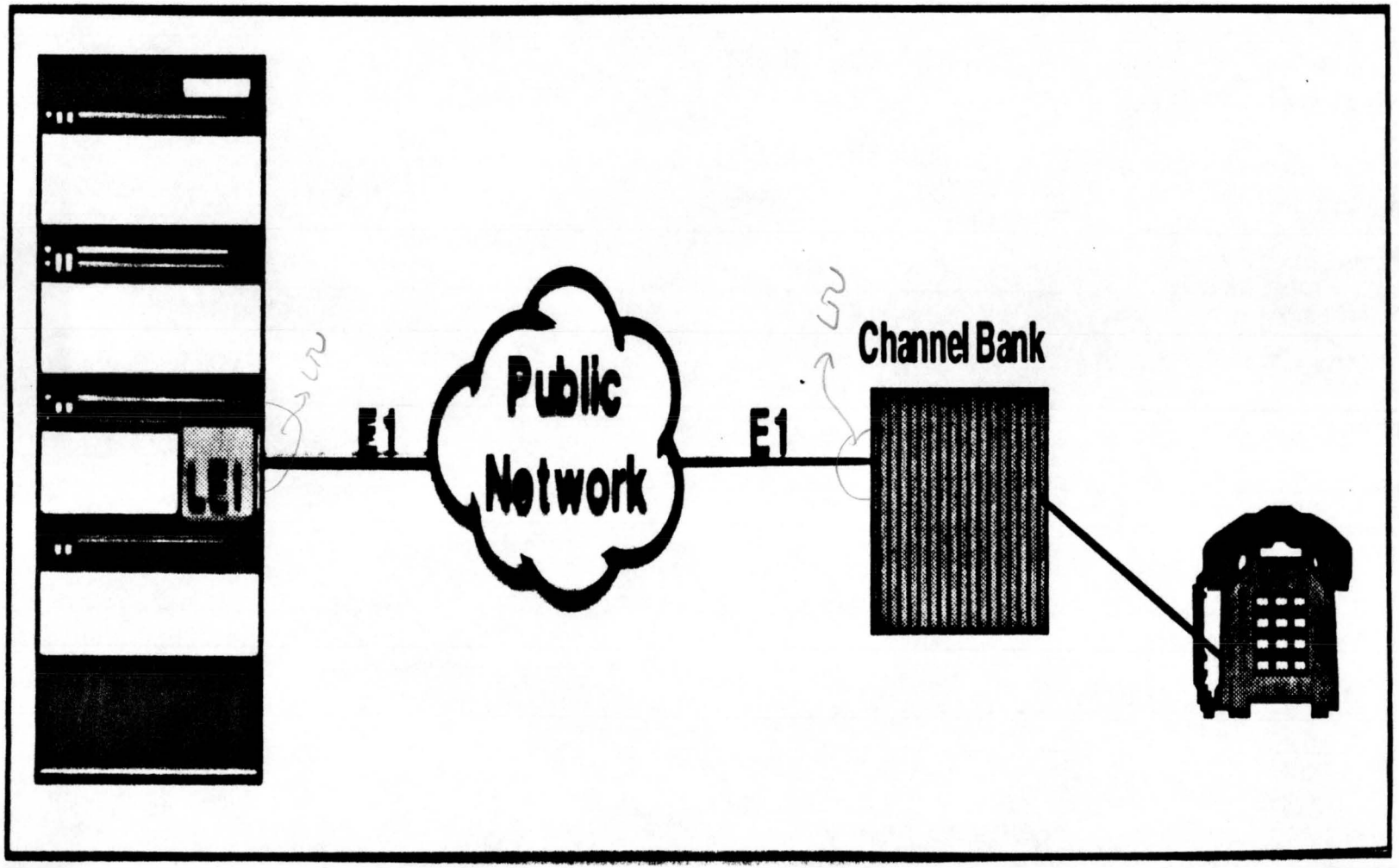

Product Compatibilities

- Verified With X11 Release 17 and later Software
- Compatible With Meridian 1 Options 11(E/C) through 81(C)
- Compatible With SL-1 Systems If IPE Modules Are Equipped
- Supports All ALC Functionality
- Fully Compatible With All IPE Monitoring and Diagnostic Capabilities

Product Compatibilities

- E1 Carrier
  - Compatible With CAS Framing
  - Compatible With AMI and HDB3 Coding
- Standard Carrier Interface
  - LTU (orCSU) Required For Public Network Access
- Compatible With Standard E1 Test Equipment
  - Uses Standard PCM In Standard E1 Timeslots
  - E1 Loopback Diagnostic Capabilities

Per G.703 test needs LTU

Engineering Details

- Timeslot Mapping
  - Motherboard
    - Unit 1 Appears On E1 Timeslot 1

      . .
    - Unit 15 Appears On E1 Timeslot 15
    - Unit 16 Appears On E1 Timeslot 17
  - Daughterboard
    - Unit 1 Appears On E1 Timeslot 18

      . .
    - Unit 14 Appears On E1 Timeslot 31

Note: Framing on timeslot 0 and Signalling on timeslot 16

Installation/Hardware Reqmts

- LEI Card Fits In Any Pair of IPE Card Slots
  - Requires Two Slots
- Connection Through Standard 50-Pin "Tip & Ring" Connector at I/O Panel
  - No Internal Cable Changes Needed
- Two Card Versions Created:
  - NT5D33AA (A0670500) For Options 21 thru 81 Type IPE Modules
  - NT5D34AA (A0670502) For Option 11 Type Cabinets

Installation/Hardware Reqmts

- NT5D35AA (A0670503) or NT5D36AA (A0675969) Cables Required For Interface to LEI
- Each Cable is Two Feet Long and Provides Connectors For:
  - DB-15 For E1 Carrier (NT5D35AA only)
  - BNC Coax For E1 Carrier (NT5D36AA only)
  - DB-9 For MMI
  - DB-9 For MMI Daisy Chain in Multiple LEI Configurations
  - DB-9 External Alarm Contact Closure Output
- Extender Cables Are Also Available

Optional Cables

- Depending On Specific Customer Requirements, the Following Optional Extender Cables Are Available:
  - NT7R66BA (A0656212) for Extension to MMI Terminal
  - NT7R86AA (A0659792) for Alarm Connection at MDF
  - NT7R87BA (A0659794) for Extension to E1 Device or E1 Public Provider (LTU or CSU)

Installation

- Dip Switches Configure All Operational Parameters
  - AMI or HBD3 Coding
  - Loop or Ground Start Protocol
  - MMI Card Address
  - Selection Of Action On E1 Link Failure
  - MMI Port Speed Selection

Maintenance

- Maintenance Separated Into Normal Line Card Maintenance And E1 Maintenance
  - Line Card Maintenance Performed Identically To ALC
  - E1 Maintenance Performed Through Separate MMI
- E1 Maintenance Interface Not Required For Normal Installation And Operation:
  - Dip Switch Settings For All Operational Parameters
  - Default Carrier Alarm Threshold Values
- Separate E1 Maintenance Commands For:
  - Carrier Configuration
  - Carrier Alarm Administration
  - Performance Reports
  - Circuit Pack and Carrier Testing

Carrier Configuration

- Selectable Frame Slip and Bit-Rate Alarm Thresholds And Durations
- Capability To Enable/Disable Alarms
- Automatic or Manual Clearing Of Carrier Alarms
- Treatment Of TN's On Carrier Alarm Condition

Carrier Alarm Operation

- Two Levels Of Alarms:
  - Level 1 - Notification Only
  - Level 2 - TN Treatment
    - All TN's Idle
    - All TN's Busy
- Types Of Carrier Alarms:
  - Loss Of Signal - Level 2
  - Loss Of Frame - Level 2
  - AIS (Blue Alarm) - Level 2
  - Frame Slips - Level 2
  - Bit Error Rate - Levels 1, and 2

Alarm Log

- Shows Last 100 Carrier Alarms
- Time and Date Stamped
- Clearable On Command

Jimpin' to do

Historical Performance Report

- Statistics For Each Hour In Past 24 Hours
  - Errored Seconds
  - Bursty Seconds
  - Severely Errored Seconds
  - Unavailable Seconds
  - Controlled Slip Seconds
  - Loss of Frame Count
  - Clearable Error Counter

Current Performance Reports

- Current Hour's Statistics
  - Errored Seconds
  - Bursty Seconds
  - Severely Errored Seconds
  - Unavailable Seconds
  - Controlled Slip Seconds
  - Loss of Frame Count
  - Clearable Error Counter

Performance Reports

- Three Reports:
  - Current Performance Report
  - Historical Performance Report
  - Alarm Log

Carrier Alarm Operation

- Frame Slip Alarms:
  - Definable Number Of Frame Slips Per Duration For Level 2 Alarm Condition To Be Declared
- Bit Error Rate Alarms:
  - Separately Definable Error Rate Thresholds And Durations For Alarm Level 1, and 2

Circuit Card and Carrier Tests

- Designed To Quickly Isolate To A Field-Replaceable Unit:
  - Line-side E1 Interface Circuit Card/Cables
  - Carrier Equipment Or Network
- Three Tests:
  - Test 1. Local Loopback Test
    - Closes local loopback relay And Tests LEI Circuit Card
  - Test 2. External Network/CPE Loopback Test
    - Allows An External Network or CPE Loopback To Be Inserted And Tests LEI With External Loopback
  - Test 3. Loopback Toward Network
    - Provides A Loopback Toward Network At LEI E1 Interface
    - Used To Test CPE Equipment Operation With LEI

Loopback Testing

Test 1
Local Loopback Test

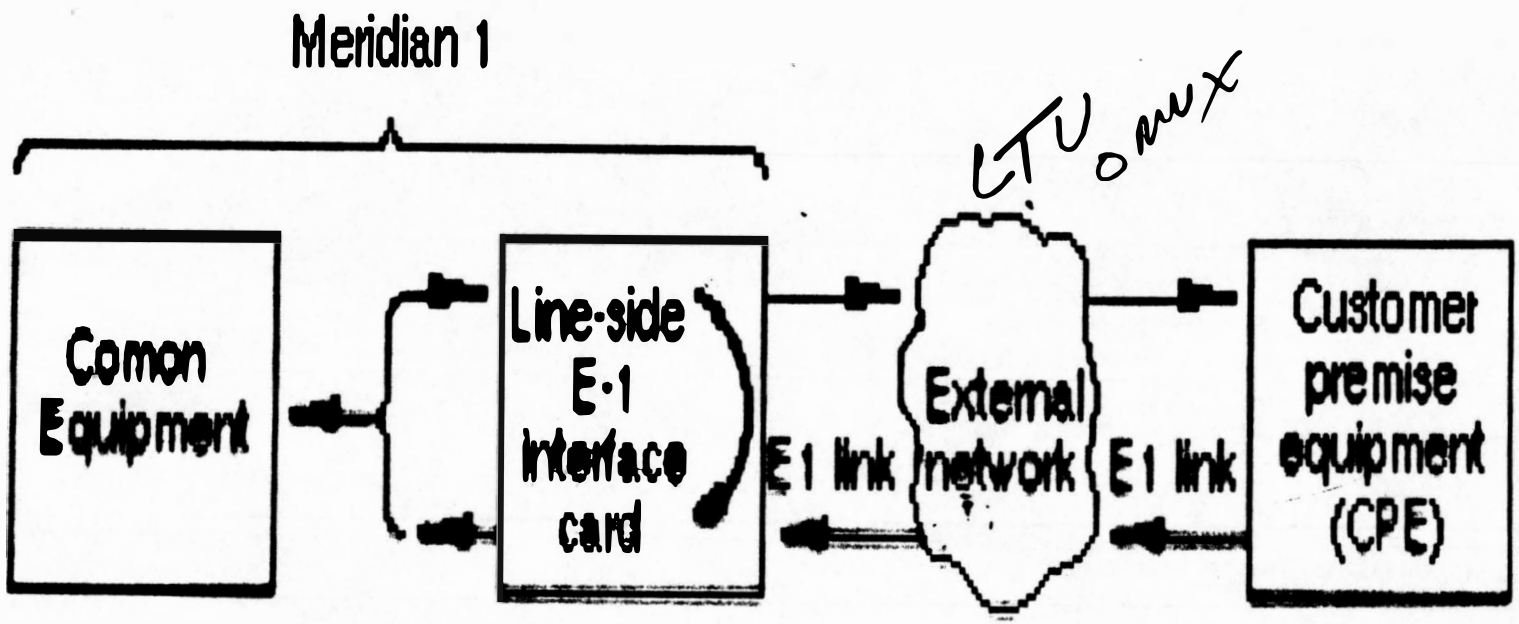

Loopback Testing

Test 2
External Network/CPE Loopback Test

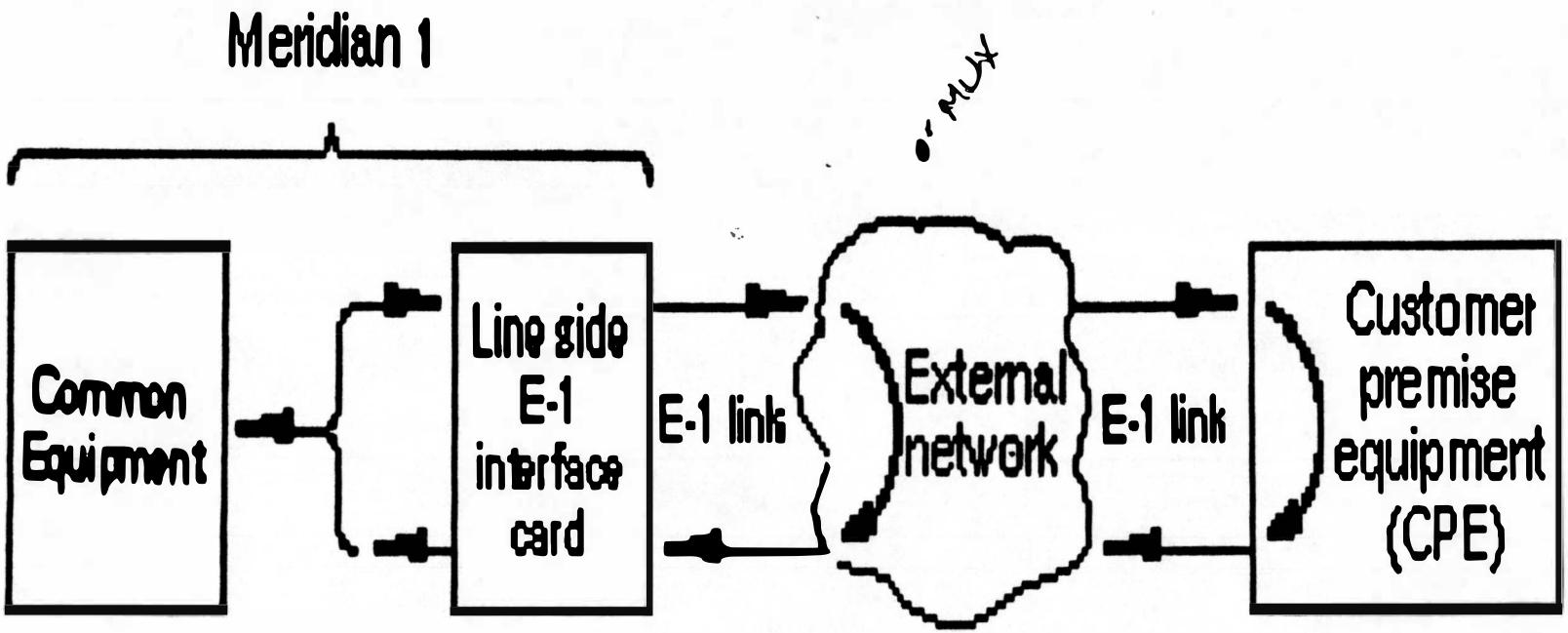

Loopback Testing

Test 3
Loopback Toward Network

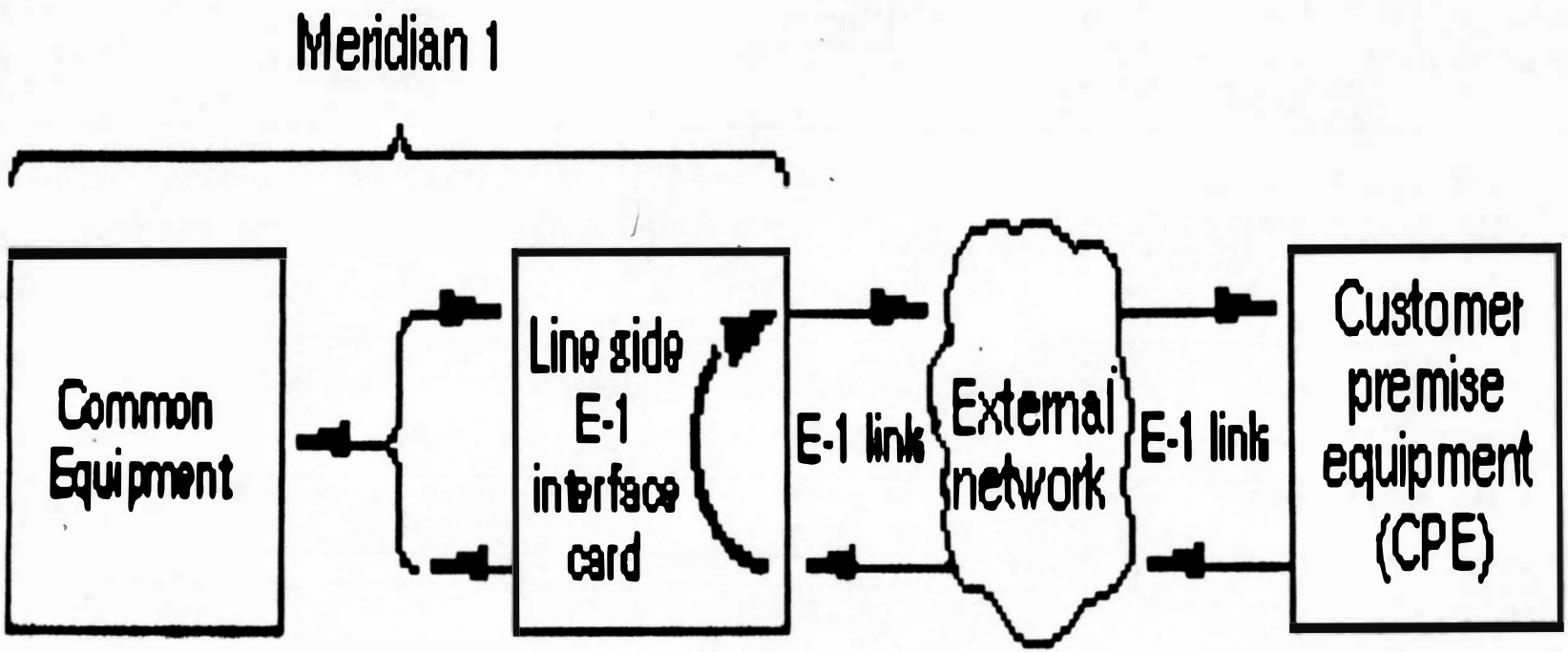

Installation and configuration

Installation and configuration of the Line-side E1 card consists of 6 basic steps:

1 Configure the dip switches on the Line-side E1 card for your environment.

2 Install the Line-side E1 card into the selected card slots.

3 Cable from the I/O panel to the LTU, MMI terminal or modem (optional), external alarm (optional), and other Line-side E1 cards for daisy chaining use of MMI terminal (optional).

4 Configure the MMI terminal.

5 Configure the Line-side E1 card through the Meridian 1 software and verify self-test results.

6 Verify initial E1 operation and configure MMI (optional).

Figure 7 provides an overview of the cabling arrangements utilized by the Line-side E1 card.

Figure 7: Line-side E1 card cabling arrangements

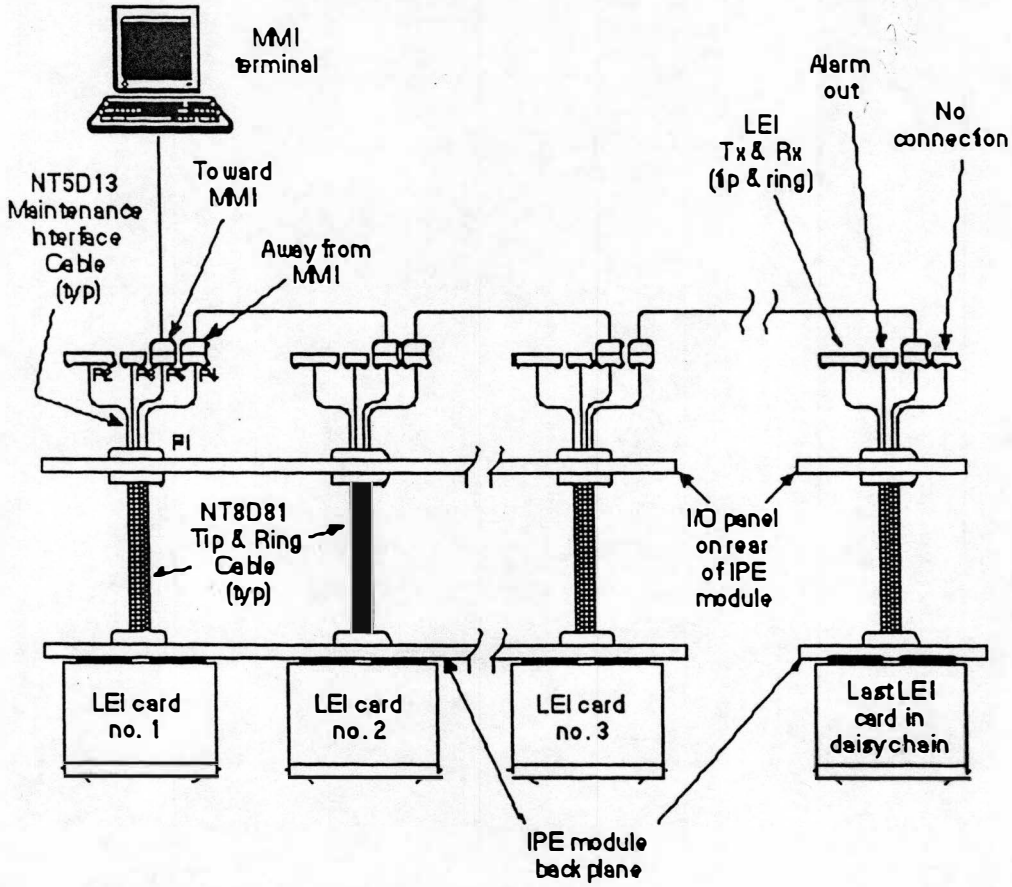

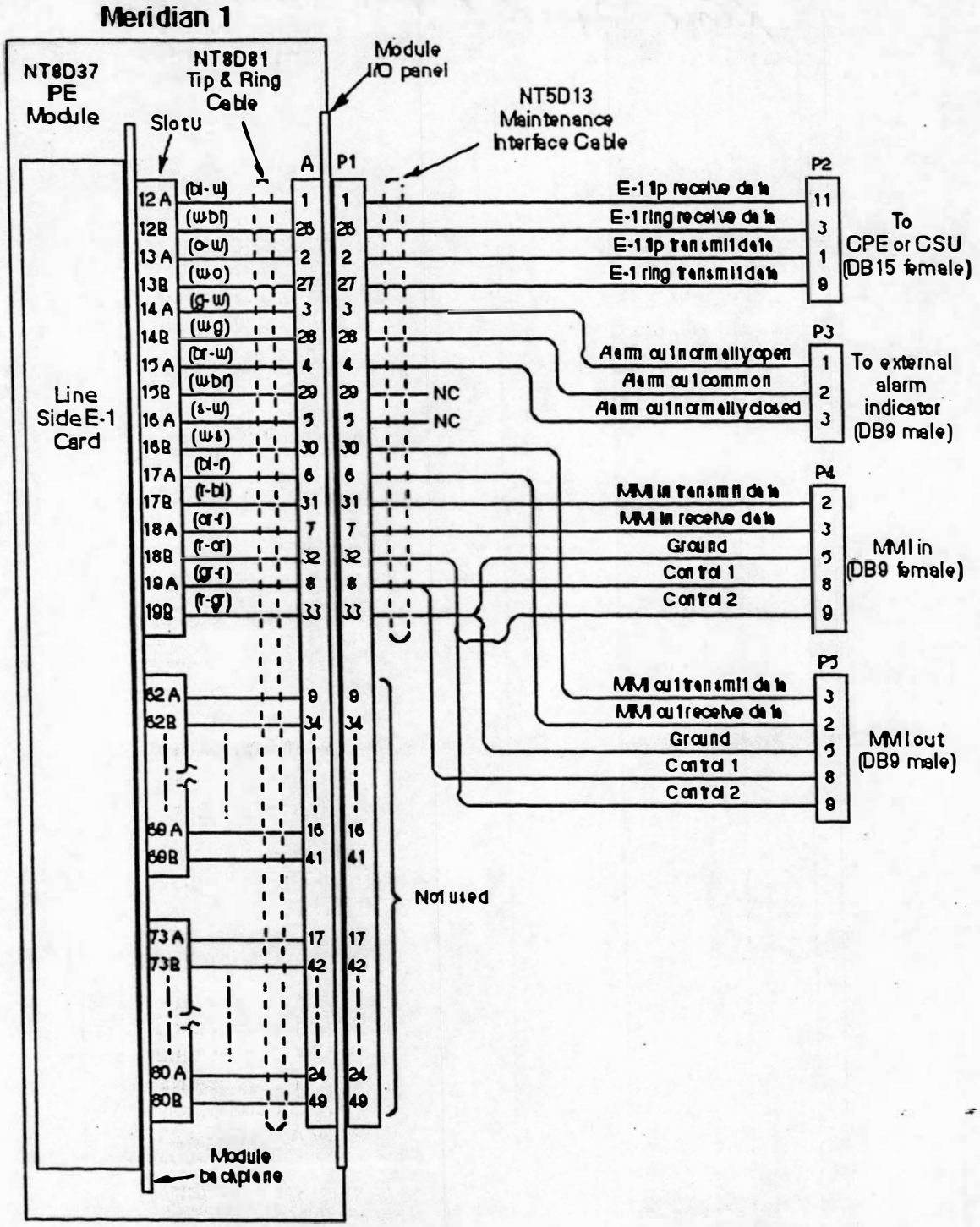
Meridian 1
NT8D37 PE Module
NT8D81 Tip & Ring Cable
Slot U
Module I/O panel
NT5D13 Maintenance Interface Cable
A
P1
Line Side E-1 Card
E-1 tip receive data
E-1 ring receive data
E-1 tip transmit data
E-1 ring transmit data
P2
To CPE or CSU (DB15 female)
NC
NC
Alarm out normally open
Alarm out common
Alarm out normally closed
P3
To external alarm indicator (DB9 male)
MMI in transmit data
MMI in receive data
Ground
Control 1
Control 2
P4
MMI in (DB9 female)
MMI out transmit data
MMI out receive data
Ground
Control 1
Control 2
P5
MMI out (DB9 male)
Not used
Module backplane

Line-side E1 Interface (LEI)

TECHNOLOGY TRANSFER
March 21, 1997

Presented by:
Telecom Strategies Inc.,
Mission Park

Product Objectives

- Line-side E1 Interface Circuit Card (LEI)
- Provide Cost-Effective E1 Interface To Line Side Of Meridian 1
- Improve Method Of Connection To E1-Based Ancillary Equipment
- Provide Access To Small Remote Locations
- Full Compliment Of E1 Monitoring And Diagnostic Capabilities

Configuration

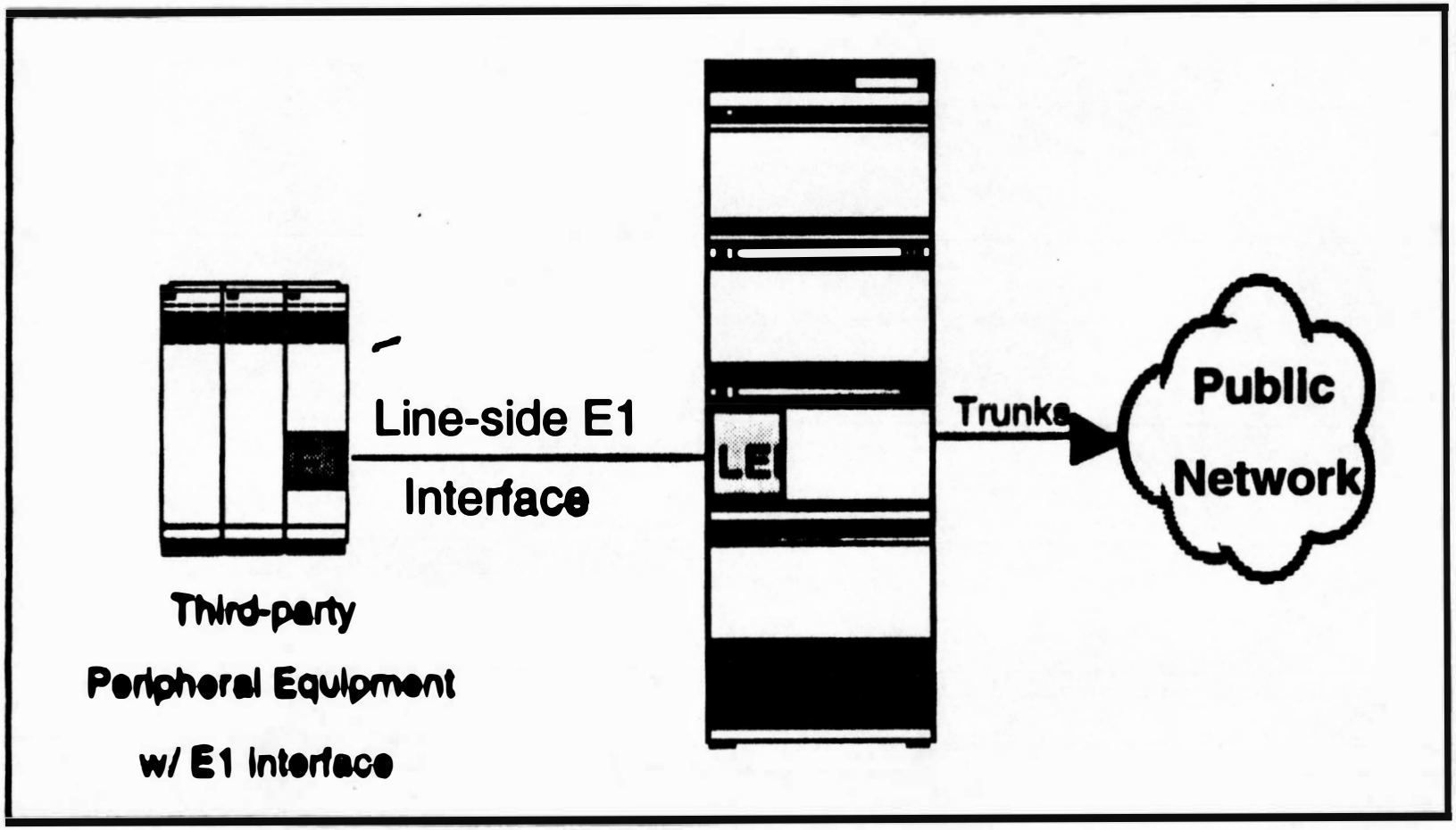

Product Overview

- One Double-Wide Circuit Card Provides Full E1 Access To IPE
- Installs In Any Intelligent Peripheral Equipment (IPE) Card Slot
  - Requires Two Consecutive Slots
  - 16 TN's Available On Motherboard
  - 14 TN's Available On Daughterboard
- Emulates Two Analog Line Cards (ALC) to X11 Software

Product Overview

- Full ALC Functionality Available To E1 Equipment
  - Acts As A Line, Not A Trunk
    - Hook Flash
    - SPRE Codes
    - Ringback Tones
- Enhanced Functionality Over Analog Line Card
  - Distant End Disconnect Feature (Supervised Analog Lines) introduced in X11 Rls 21 Software Fully Supported
  - Selectable Interface Protocol
    - Loop Start
    - Pseudo-Ground Start
      - Glare Potential On M-1 Outbound Calls

Product Overview

- Powerful E1 Line Monitoring And Diagnostic Capability
  - Separate MMI Port For E1 Link Maintenance
    - Not Required For Normal Operation
    - Daisy Chain Cable For Multiple LEI Maintenance
- Interfaces Up To 500 Miles Before Echo Cancellers Are Required
- Uses Channel Associated Signalling (CAS)

Product Applications

- Use Anywhere E1 Compatible Equipment Needs To Attach To Line-side Of Meridian 1
  - E1 Compatible IVR Equipment
  - E1 Compatible VRU Equipment
  - E1 Compatible Turret Systems
  - E1 Compatible Wireless Systems
  - Remote 2500 Sets Through E1 To Channel Bank
  - Remote Norstar Sites Behind Meridian 1 Over E1

Application Example

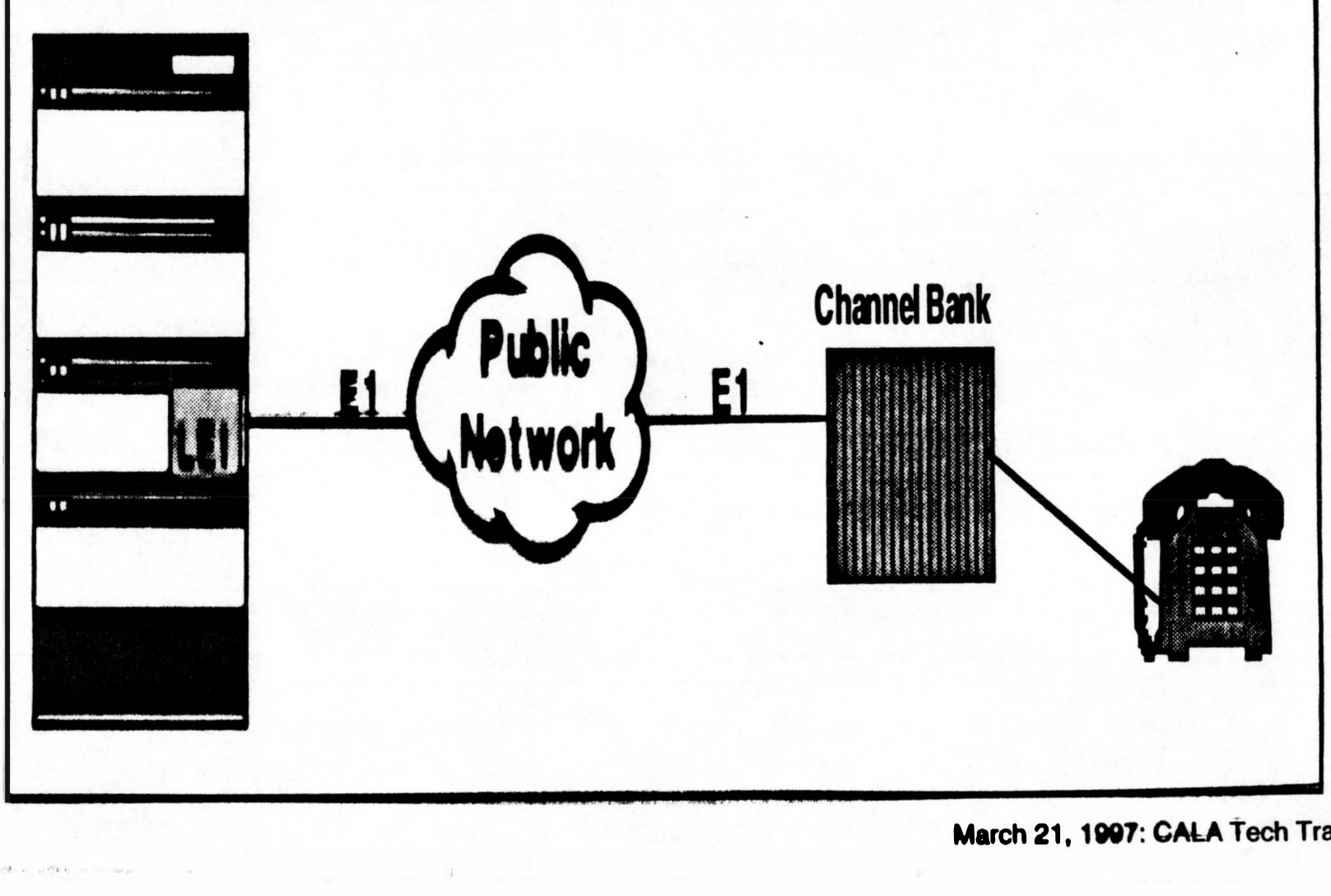

Product Compatibilities

- Verified With X11 Release 17 and later Software
- Compatible With Meridian 1 Options 11(E/C) through 81(C)
- Compatible With SL-1 Systems If IPE Modules Are Equipped
- Supports All ALC Functionality
- Fully Compatible With All IPE Monitoring and Diagnostic Capabilities

Product Compatibilities

- E1 Carrier
  - Compatible With CAS Framing
  - Compatible With AMI and HDB3 Coding
- Standard Carrier Interface
  - LTU (orCSU) Required For Public Network Access
- Compatible With Standard E1 Test Equipment
  - Uses Standard PCM In Standard E1 Timeslots
  - E1 Loopback Diagnostic Capabilities

Per G.703 Just runs CPU

Engineering Details

- Timeslot Mapping
  - Motherboard
    - Unit 1 Appears On E1 Timeslot 1

      . .
    - Unit 15 Appears On E1 Timeslot 15
    - Unit 16 Appears On E1 Timeslot 17
  - Daughterboard
    - Unit 1 Appears On E1 Timeslot 18

      . .
    - Unit 14 Appears On E1 Timeslot 31

Note: Framing on timeslot 0 and Signalling on timeslot 16

Installation/Hardware Reqmts

- LEI Card Fits In Any Pair of IPE Card Slots
  - Requires Two Slots
- Connection Through Standard 50-Pin "Tip & Ring" Connector at I/O Panel
  - No Internal Cable Changes Needed
- Two Card Versions Created:
  - NT5D33AA (A0670500) For Options 21 thru 81 Type IPE Modules
  - NT5D34AA (A0670502) For Option 11 Type Cabinets

Installation/Hardware Reqmts

- NT5D35AA (A0670503) or NT5D36AA (A0675969) Cables Required For Interface to LEI
- Each Cable is Two Feet Long and Provides Connectors For:
  - DB-15 For E1 Carrier (NT5D35AA only)
  - BNC Coax For E1 Carrier (NT5D36AA only)
  - DB-9 For MMI
  - DB-9 For MMI Daisy Chain in Multiple LEI Configurations
  - DB-9 External Alarm Contact Closure Output
- Extender Cables Are Also Available

Optional Cables

- Depending On Specific Customer Requirements, the Following Optional Extender Cables Are Available:
  - NT7R66BA (A0656212) for Extension to MMI Terminal
  - NT7R86AA (A0659792) for Alarm Connection at MDF
  - NT7R87BA (A0659794) for Extension to E1 Device or E1 Public Provider (LTU or CSU)

Installation

- Dip Switches Configure All Operational Parameters
  - AMI or HBD3 Coding
  - Loop or Ground Start Protocol
  - MMI Card Address
  - Selection Of Action On E1 Link Failure
  - MMI Port Speed Selection

Maintenance

- Maintenance Separated Into Normal Line Card Maintenance And E1 Maintenance
  - Line Card Maintenance Performed Identically To ALC
  - E1 Maintenance Performed Through Separate MMI
- E1 Maintenance Interface Not Required For Normal Installation And Operation:
  - Dip Switch Settings For All Operational Parameters
  - Default Carrier Alarm Threshold Values
- Separate E1 Maintenance Commands For:
  - Carrier Configuration
  - Carrier Alarm Administration
  - Performance Reports
  - Circuit Pack and Carrier Testing

Carrier Configuration

- Selectable Frame Slip and Bit-Rate Alarm Thresholds And Durations
- Capability To Enable/Disable Alarms
- Automatic or Manual Clearing Of Carrier Alarms
- Treatment Of TN's On Carrier Alarm Condition

Carrier Alarm Operation

- Two Levels Of Alarms:
  - Level 1 - Notification Only
  - Level 2 - TN Treatment
    - All TN's Idle
    - All TN's Busy
- Types Of Carrier Alarms:
  - Loss Of Signal - Level 2
  - Loss Of Frame - Level 2
  - AIS (Blue Alarm) - Level 2
  - Frame Slips - Level 2
  - Bit Error Rate - Levels 1, and 2

Alarm Log

- Shows Last 100 Carrier Alarms
- Time and Date Stamped
- Clearable On Command

Historical Performance Report

- Statistics For Each Hour In Past 24 Hours
  - Errored Seconds
  - Bursty Seconds
  - Severely Errored Seconds
  - Unavailable Seconds
  - Controlled Slip Seconds
  - Loss of Frame Count
  - Clearable Error Counter

Current Performance Reports

- Current Hour's Statistics
  - Errored Seconds
  - Bursty Seconds
  - Severely Errored Seconds
  - Unavailable Seconds
  - Controlled Slip Seconds
  - Loss of Frame Count
  - Clearable Error Counter

Performance Reports

- Three Reports:
  - Current Performance Report
  - Historical Performance Report
  - Alarm Log

Carrier Alarm Operation

- Frame Slip Alarms:
  - Definable Number Of Frame Slips Per Duration For Level 2 Alarm Condition To Be Declared
- Bit Error Rate Alarms:
  - Separately Definable Error Rate Thresholds And Durations For Alarm Level 1, and 2

Circuit Card and Carrier Tests

- Designed To Quickly Isolate To A Field-Replaceable Unit:
  - Line-side E1 Interface Circuit Card/Cables
  - Carrier Equipment Or Network
- Three Tests:
  - Test 1. Local Loopback Test
    - Closes local loopback relay And Tests LEI Circuit Card
  - Test 2. External Network/CPE Loopback Test
    - Allows An External Network or CPE Loopback To Be Inserted And Tests LEI With External Loopback
  - Test 3. Loopback Toward Network
    - Provides A Loopback Toward Network At LEI E1 Interface
    - Used To Test CPE Equipment Operation With LEI

Loopback Testing

Test 1
Local Loopback Test

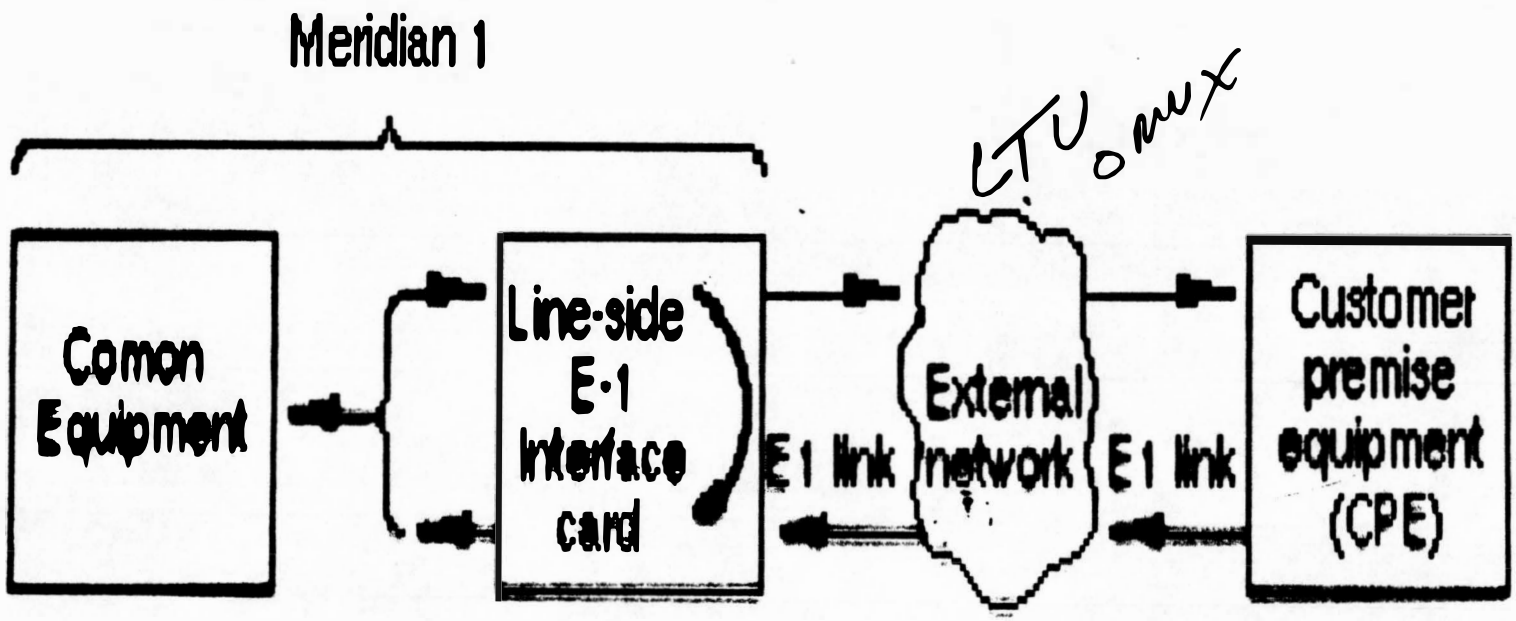

Loopback Testing

Test 2
External Network/CPE Loopback Test

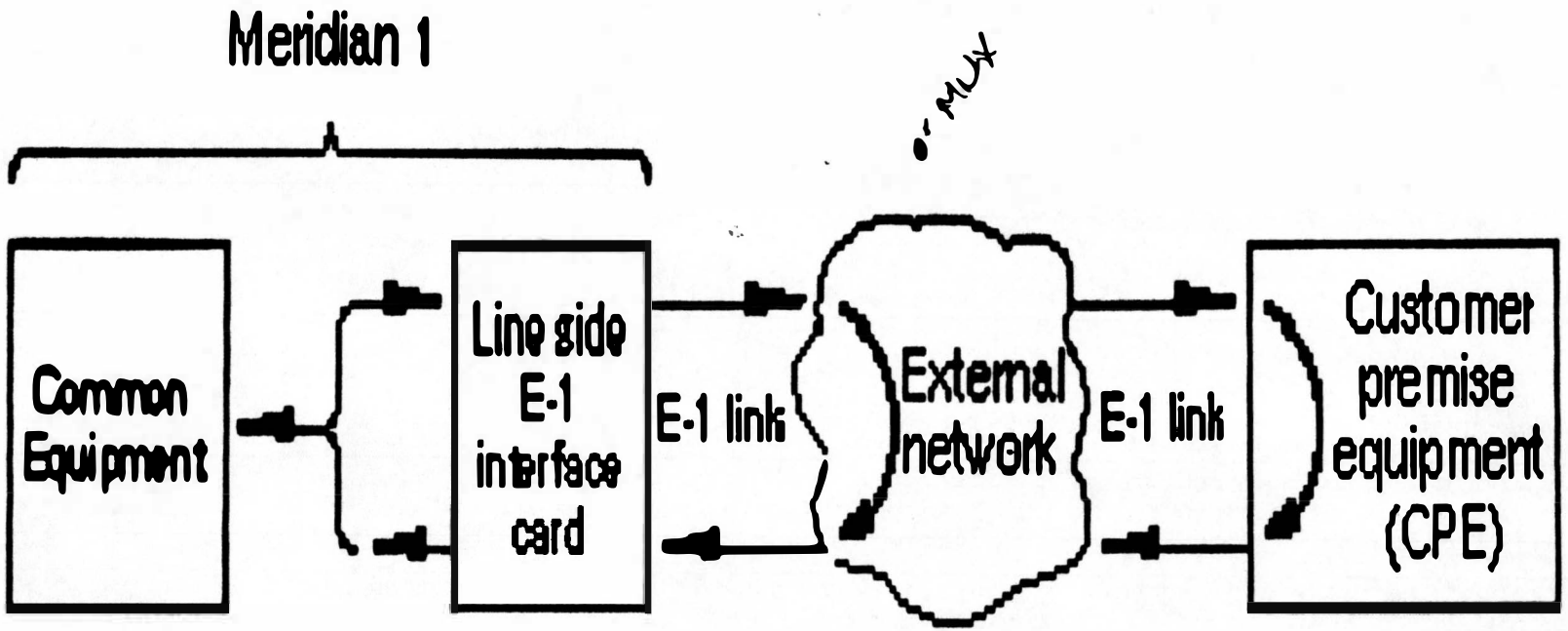

Loopback Testing

Test 3
Loopback Toward Network

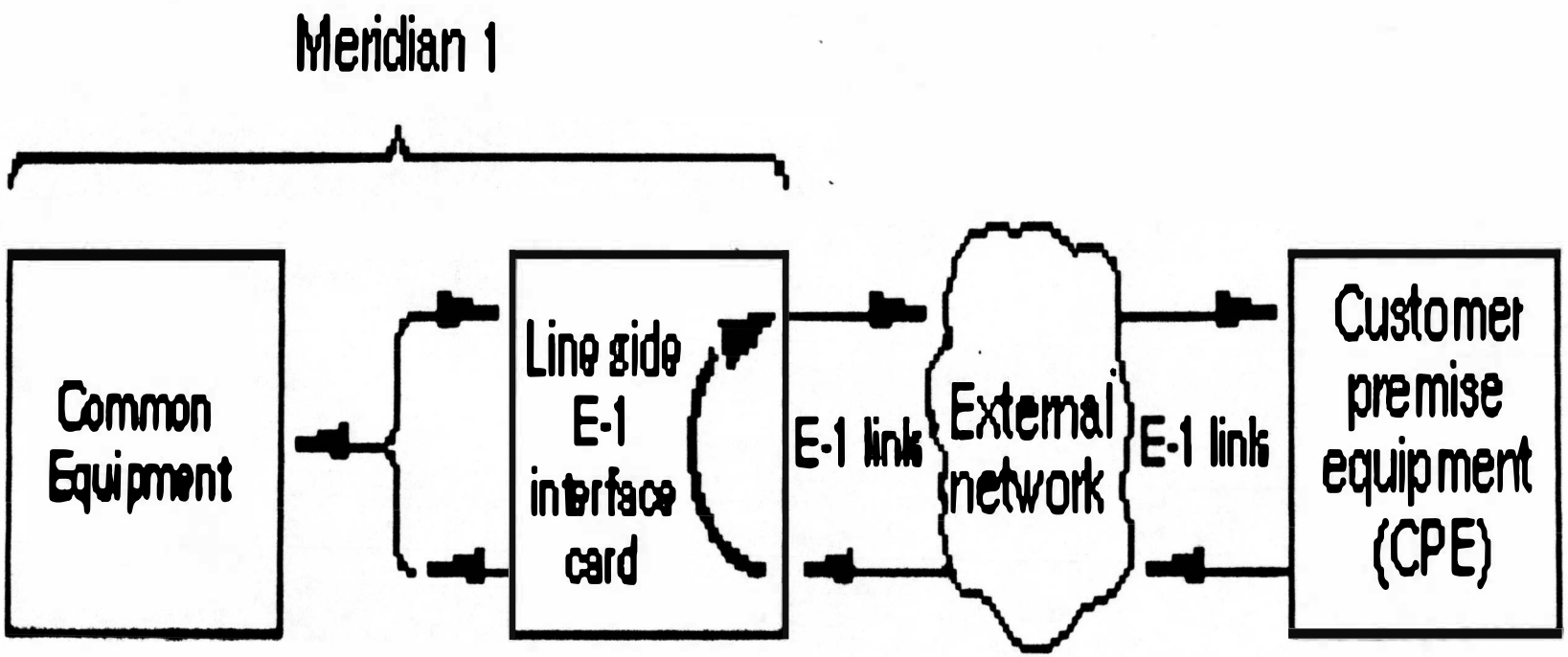

Installation and configuration

Installation and configuration of the Line-side E1 card consists of 6 basic steps:

1. Configure the dip switches on the Line-side E1 card for your environment.
2. Install the Line-side E1 card into the selected card slots.
3. Cable from the I/O panel to the LTU, MMI terminal or modem (optional), external alarm (optional), and other Line-side E1 cards for daisy chaining use of MMI terminal (optional).
4. Configure the MMI terminal.
5. Configure the Line-side E1 card through the Meridian 1 software and verify self-test results.
6. Verify initial E1 operation and configure MMI (optional).

Figure 7 provides an overview of the cabling arrangements utilized by the Line-side E1 card.

Figure 7: Line-side E1 card cabling arrangements

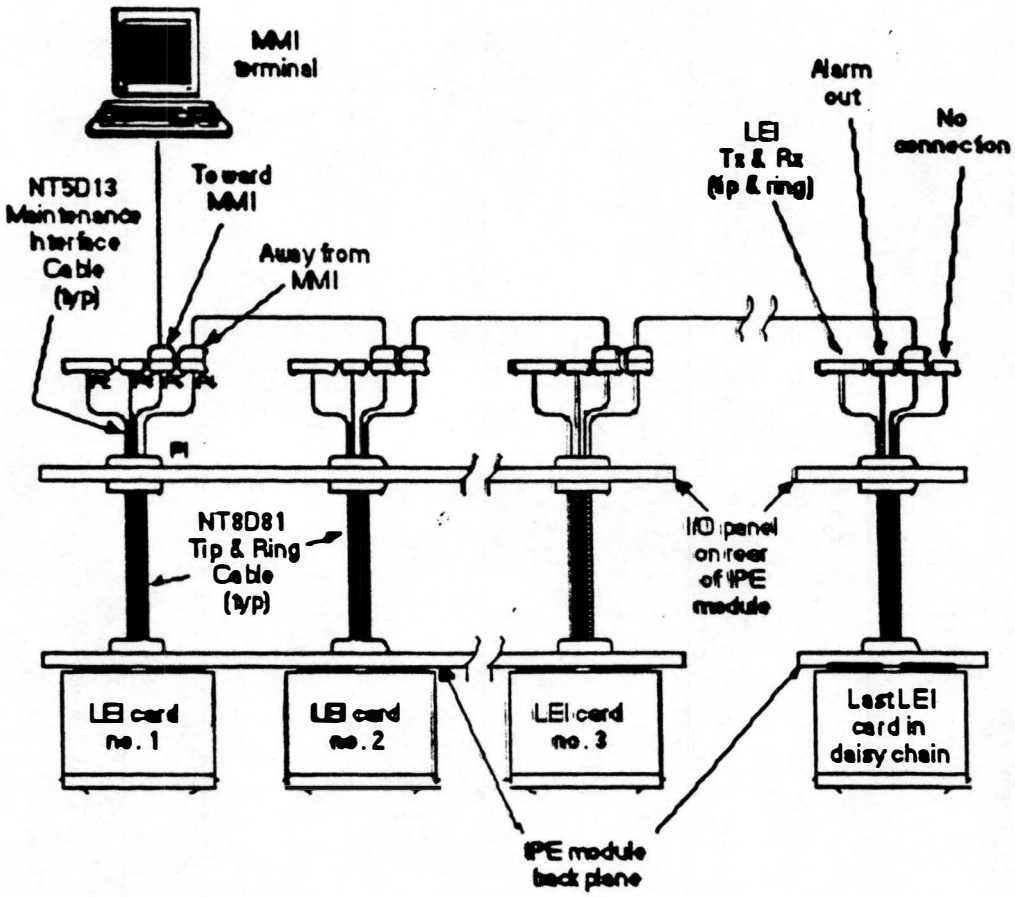

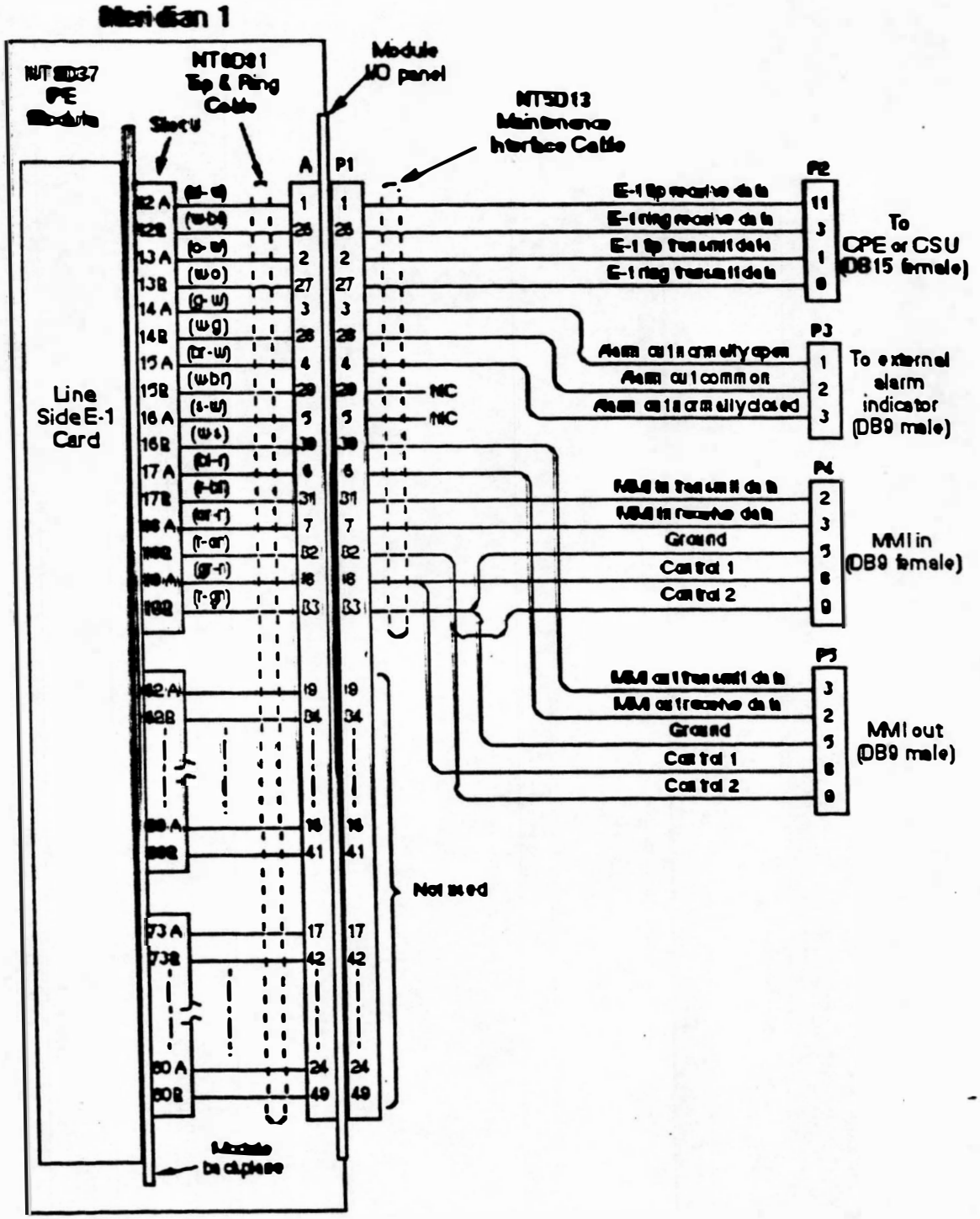
Meridian 1
NT8D37
PE
Module
NT8D81
Tip & Ring
Cable
Module
MO panel
NT5D13
Maintenance
Interface Cable
Slot U
A
P1
Line
Side E-1
Card
E-1 tip receive data
E-1 ring receive data
E-1 tip transmit data
E-1 ring transmit data
P2
To
CPE or CSU
(DB15 female)
Alarm out normally open
Alarm out common
Alarm out normally closed
P3
To external
alarm
indicator
(DB9 male)
NC
NC
MMI in transmit data
MMI in receive data
Ground
Control 1
Control 2
P4
MMI in
(DB9 female)
MMI out transmit data
MMI out receive data
Ground
Control 1
Control 2
P5
MMI out
(DB9 male)
Not used
Module
backplane

NORTEL
NORTHERN TELECOM

MIRAN

(Meridian Integrated RAN)

Barry Bruxvoort - PLM Meridian 1 Large Systems

November 29, 1996

MIRAN Overview

MIRAN is an integrated IPE card for Recorded Announcement (RAN) & Music applications.

Compatible with Option 11E - 81C systems & future system evolution strategies.

Replacement product for external OEM RANs.

Compatible with X11 Rls 21 or later software.

Superior features compared to OEM RANs.

General Availability planned for February '97

Meridian Integrated RAN (MIRAN)

MIRAN Benefits & Features

NORTEL
NORTHERN TELECOM

Easy Installation & Maintenance

- Integrated solution, card sits in IPE slot on Options 11E - 81C.
- No external devices or cables required for basic configurations.
- Easy menu driven OA&M interfaces (voice & VT100 terminal).
- X11 provisioning the same as today's RANs (EXUT emulation).

Flexibility

- Small, Medium and Large versions offered at different price levels.
- Up to 10 recording channels & up to 8 built-in EXUT emulation ports.
- Offers recording storage from 4 minutes up to 5 hours.
- Voice storage expansion provided via PCMCIA flash cards.

Barbaro

Cool RAN Applications

- Offers Time of Day & Emergency messaging functions.
- Can record & switch up to 16 different messages per channel each day.
- Records messages from DTMF sets, cassette tapes or PCMCIA cards.
- Professional recordings can be provided using a PC with a sound package.
- Back-up messages can be stored on PCMCIA flash cards.

Nitdo

Nifty Music Applications

- Can play digitally stored music from PCMCIA cards.
- Two analog input ports can be used to pipe-in music.
- EXUT emulation ports can be provisioned for music.

MIRAN Platform Overview

- 486DX4-100Mz PC Based Architecture
- Vx Works Operating System
- 4MBytes of DRAM
- Onboard DSP (Equivalent to 8 Meridian Mail Ports)
- 1 PCMCIA Voice Storage Expansion Slot
- 1 PCMCIA Utility Slot
- 2 Proprietary PCMCIA DSP Slots (for future applications)
- 8 Built-In Trunk Emulation Ports
- 10 RAN Recording Channels

Meridian Integrated RAN (MIRAN)

Architecture Overview

NORTEL
NORTHERN TELECOM

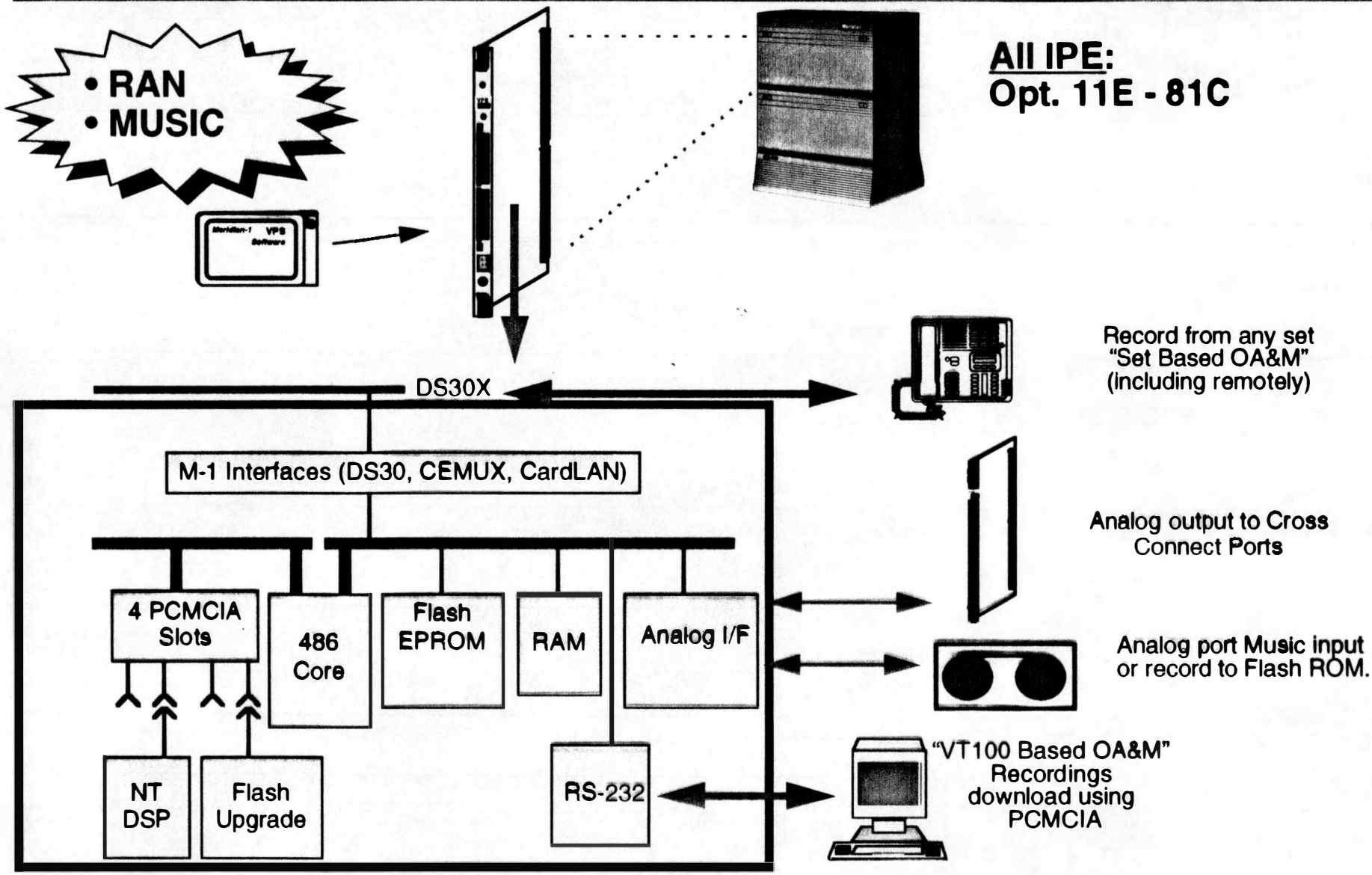

Meridian Integrated RAN (MIRAN)

MIRAN Port Configurations

NORTEL
NORTHERN TELECOM

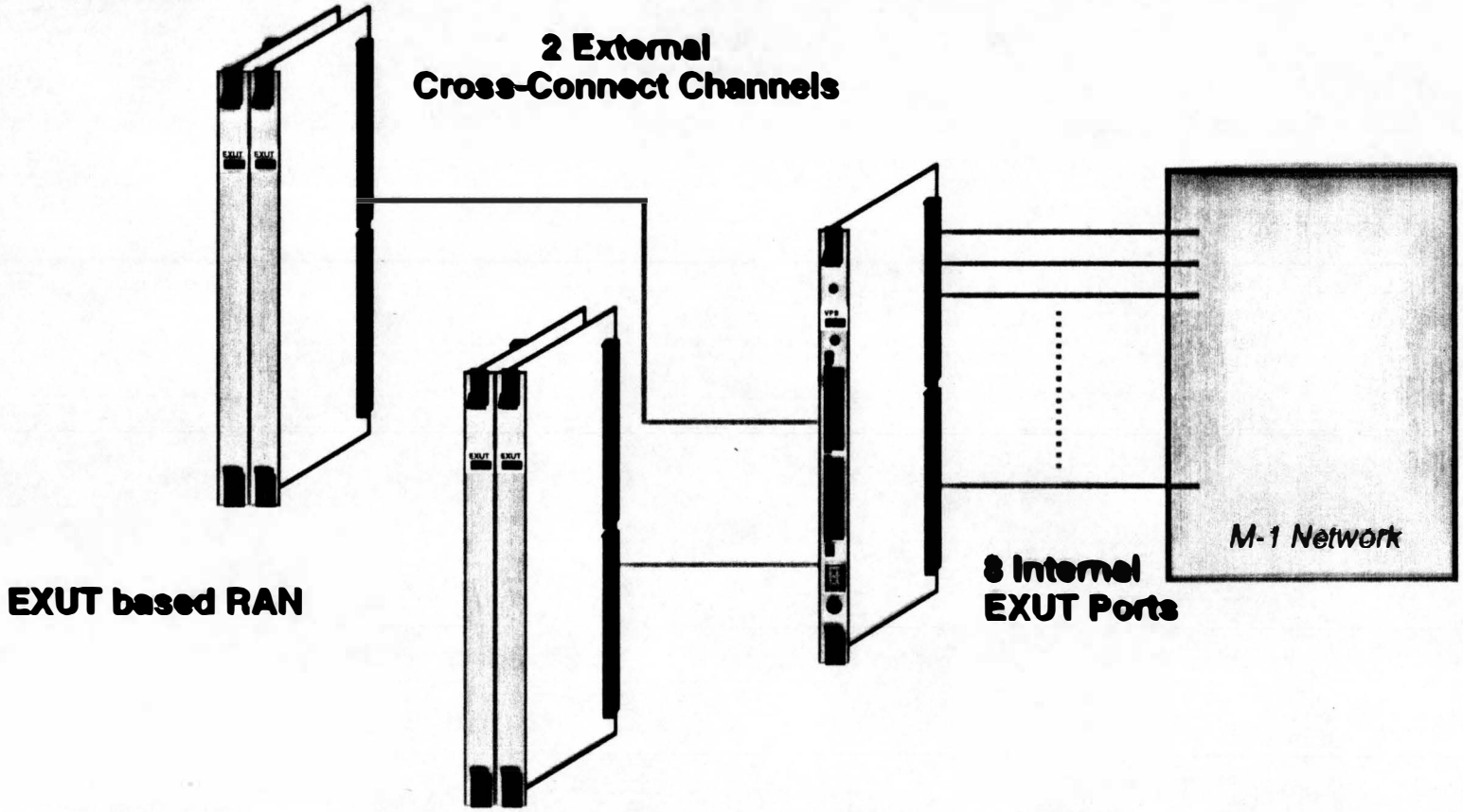

- 8 internal EXUT emulation ports which support all RAN modes.
  - All 8 limited to only 1 EXUT emulation port per RAN channel.
- 2 external cross connect channels must connect to existing RAN trunk cards (no EXUT emulation).
  - Can cross connect up to 12 EXUT ports for 600 ohm termination
  - Can cross connect up to 18 EXUT ports for 900 ohm termination

MIRAN Orderable Sizes

- All configurations utilize same base hardware.
- Functionality is enabled by keycode on the card.

- **The Small MIRAN**
  - 4 Internal one-to-one ports
  - 1 Multi cross connect port
- **The Medium MIRAN**
  - 4 Internal one-to-one ports
  - 2 Multi cross connect ports
- **The Large MIRAN**
  - 8 Internal one-to-one ports
  - 2 Multi cross connect ports

Upgrades & Expansion

- **Emulation Port & RAN Channel Capacity Upgrades**
  - Small to Medium, Medium to Large, Small to Large.
  - Only a keycode is required (linked to card security I.D.).
  - Card security ID provided to Nortel & then keycode is faxed to distributor.
  - Keycodes are entered via MIRAN VT100 terminal without any service disruption.
- **Voice Storage Capacity Expansion**
  - Standard offering of 4 minutes can be upgraded to 5 hours using PCMCIA flash cards.
  - PCMCIA Type I, II or III, 1.8Mb to 170Mb can be used.
  - New keycode not required.
  - 1Mb = 2 minutes of voice storage.

MIRAN On Board Software

- **Software will come pre-loaded on MIRAN packs**
  - Keycodes will be pre-loaded on MIRAN packs shipped with new systems orders.
  - Packs shipped as merchandise will not have pre-loaded keycodes.
- **MIRAN On Board Software - Bug-Fix Up-Issues**
  - If required, will be delivered via a 3 Mb PCMCIA card which can be reused for multiple VPS cards.
  - New keycodes are not required.
- **Future New MIRAN Features & Applications**
  - Delivered via 3 Mb PCMCIA which can be reused for multiple MIRAN cards.
  - A new keycode will be required for each pack.

MIRAN Supports Two Methods of Communication!

1) Set Based OA&M

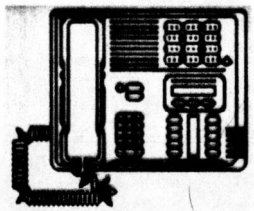

- Menu driven voice interface for basic RAN applications.
- Available from any DTMF set on site or remote.
- Key & prompts similar to Meridian Mail.
- Uses internal port 7 on MIRAN card equipped as tie trunk for access.

2) Text Based User Interface

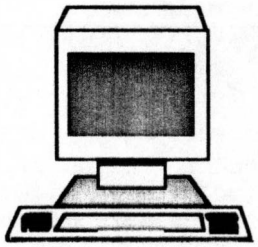

- Menu driven interface available through RS-232 port on VPS.
- Single VT100 terminal for up to 16 MIRAN cards through RS-232.
- Two password levels.
- Used to set-up time of day messaging, emergency messages and to read and to back-up voice files.

MIRAN X11 Administration

- MIRAN looks like an EXUT in X11 software.
- New RAN mode called 'Multi-Channel Level Start/ Control mode' (MLSS) added to X11.
  - Allows individual RAN trunks within a RAN route to be configured with individual RAN channels.
  - Can be used with MIRAN or other RAN machines.
  - Will be required for most MIRAN applications.
  - Targeted for Rls 21.E & for Rls 22 up-issue 1.
- MLSS mode adds new prompt in LD 16.
  - Prompt Response

    TRTP RAN

    RRTP MLSS
  - The connection of multiple EXUTs to single RAN channel is not supported by MLSS.
  - EXUTs (NT8D14BA or greater) or VPS packs are required to support MLSS mode.

Present RANs vs. MIRAN

NORTEL
NORTHERN TELECOM

EXUT based RAN

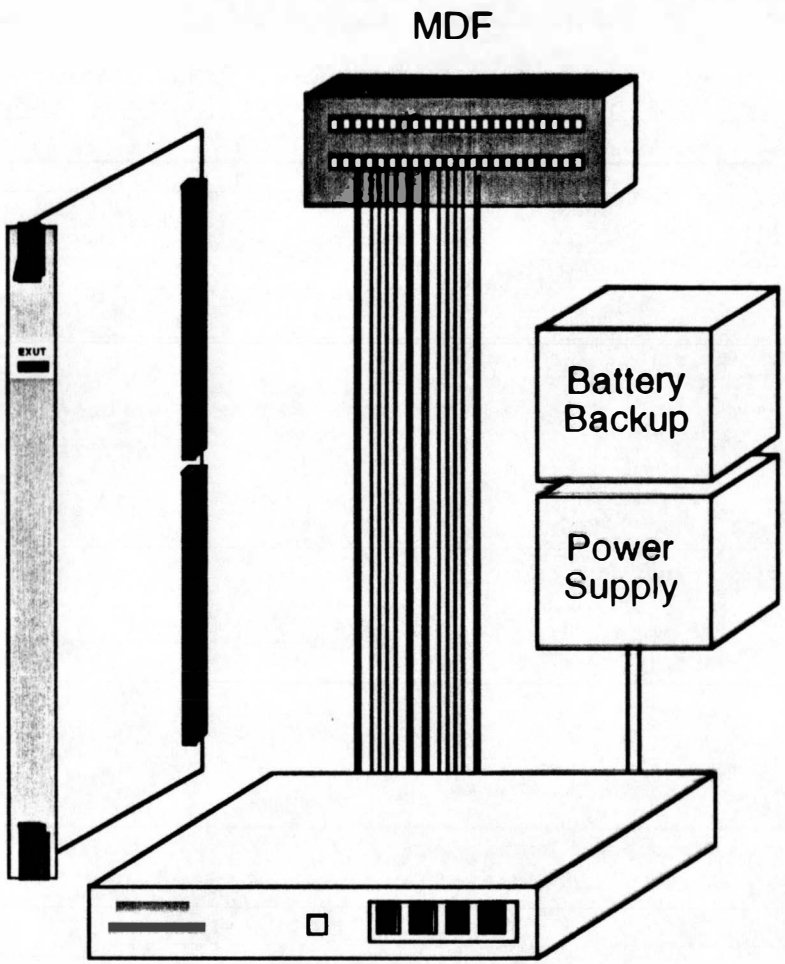

MIRAN based RAN

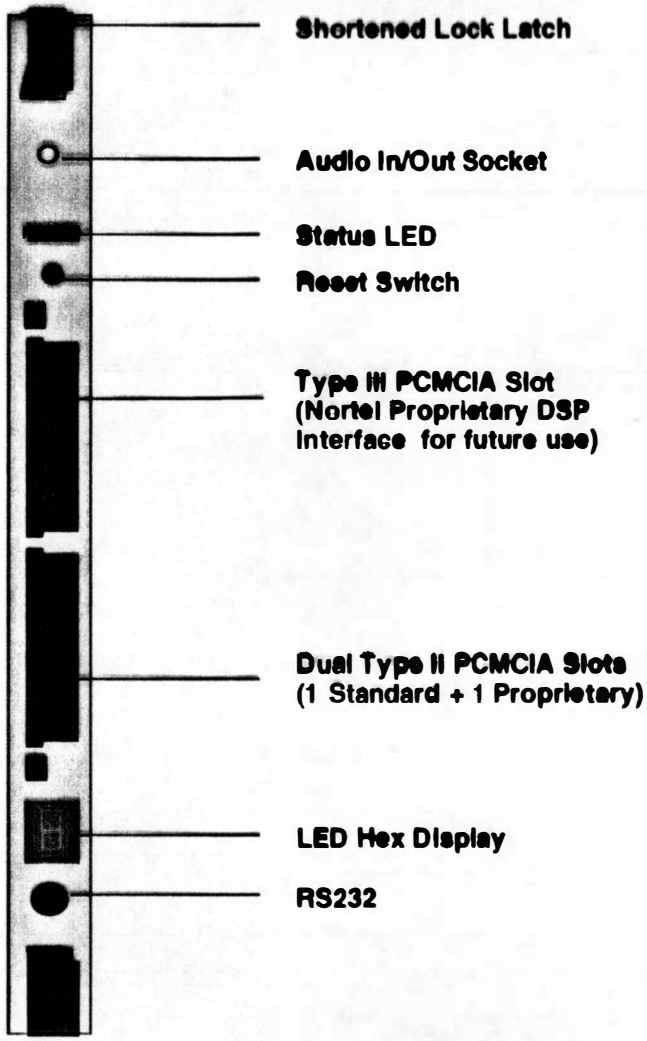

NORTEL
NORTHERN TELECOM

MICB

(Meridian Integrated Conference Bridge)

Barry Bruxvoort - PLM Meridian 1 Large Systems

January 31, 1997

Current Conference Bridges

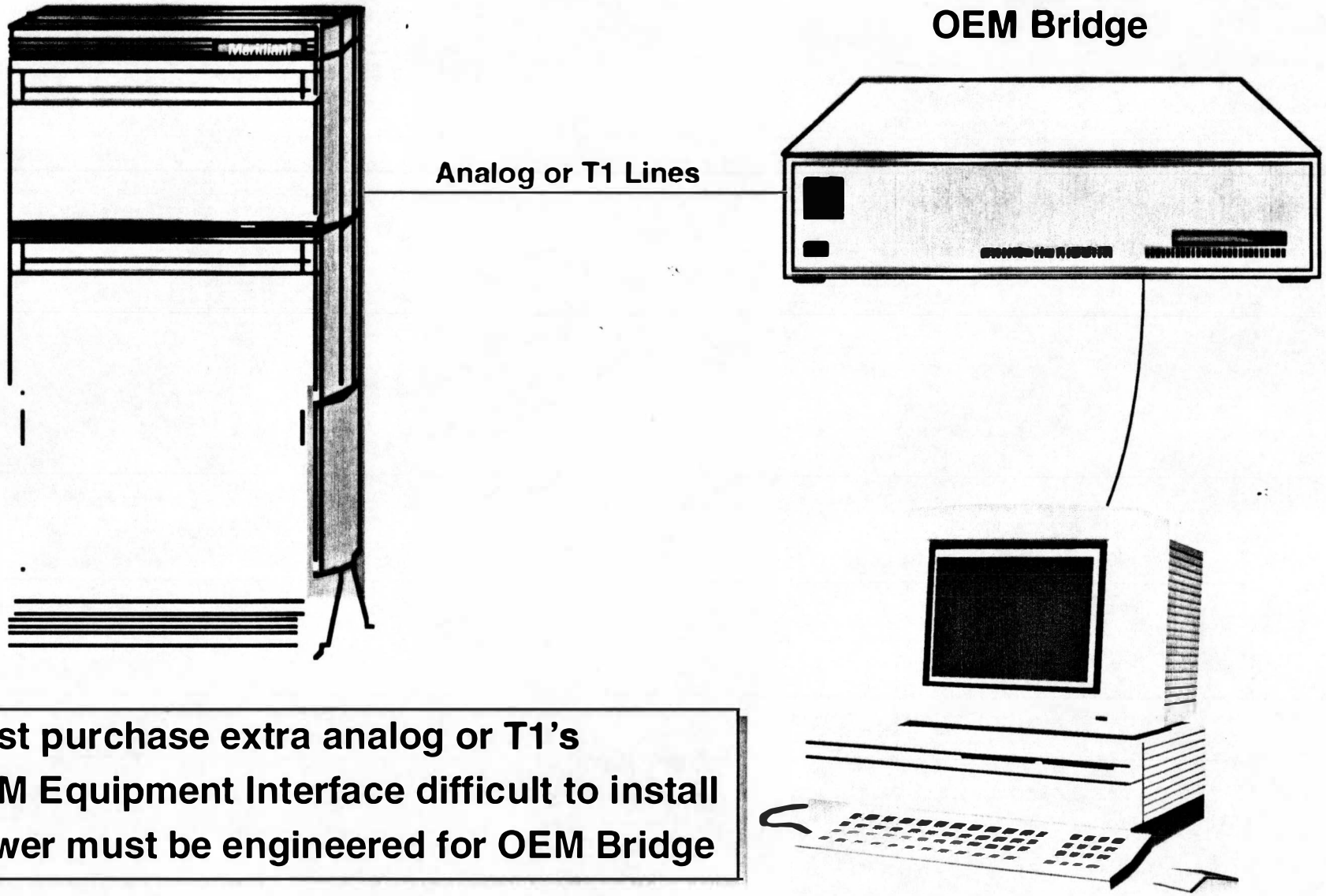

- Must purchase extra analog or T1's
- OEM Equipment Interface difficult to install
- Power must be engineered for OEM Bridge

Overview

MICB is an integrated IPE card for dial-in audio bridge conferencing.

Compatible with Option 11E - 81C systems & future system evolution strategies.

Eliminates the need for external OEM audio conference bridges.

X11 Rls 22 supports 32 ports. X11 Rls 17 & later support 16 ports.

OA&M can be supported by Meridian Administration Tool.

General Availability planned for April '97

X11 Requirements

- **MICB looks like a Digital Line Card (DLC) in X11.**
- **Software package requirements;**
  - ACD Basic Package (45)
  - ACD Advanced Features (41)
  - EAR - Enhanced ACD Routing (214)
  - Digital Set (88)
  - ESS End to End Signaling (10)
- **Two CDN's are required for every simultaneous conference call.**
  - One CDN for the Chairperson & one CDN for participants
  - Example; 5 simultaneous scheduled conferences would require 10 CDN's. 10 simultaneous conferences is the max supported.
  - ISM Level Impact: CDN's impact ISM levels for ACD-DN's/CDN's.
- **Each TN or conference port is programmed like an ACD agent.**
  - Need Rls 22 or greater to support 32 ports.
  - ISM level impact: Each MICB port requires one ACD agent.

The MICB Solution

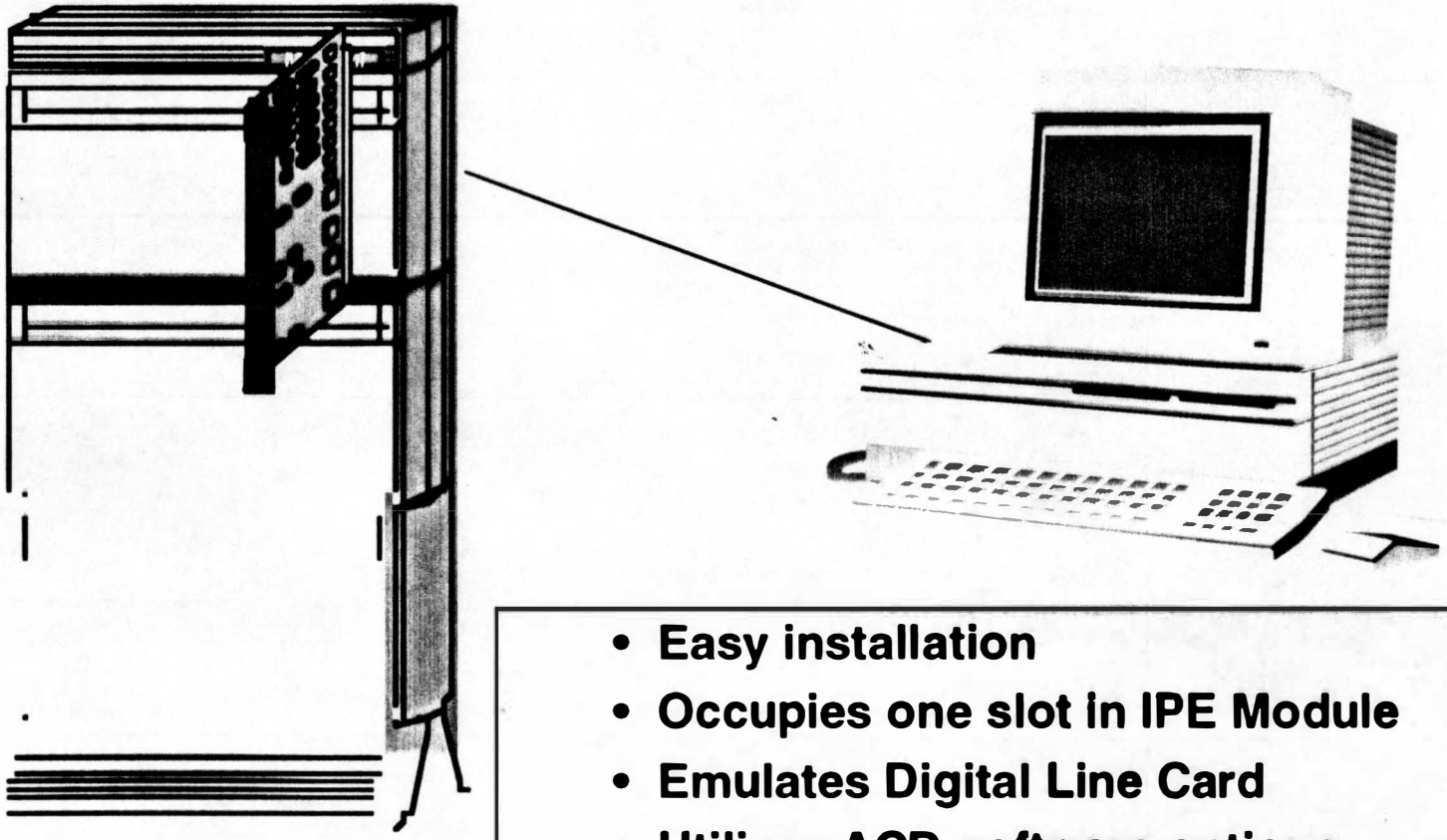

- **Easy installation**
- **Occupies one slot in IPE Module**
- **Emulates Digital Line Card**
- **Utilizes ACD software options**
- **Ethernet or cable connectivity for conference scheduling**
- **Supported by Meridian Administration Tool**

Benefits & Features

Easy Installation & Maintenance

- Integrated solution, card sits in IPE slot on Options 11E - 81C.
- Only one cable or Ethernet connection required for OA&M interfaces.
- Use existing trunks. Dedicated trunks are not needed.
- Fast X11 provisioning using ACD features (CDN's & ACD agents).
- MICB uses DLC emulation, with 32 ports supported on Rls 22.
- Nortel Product supported by ETAS/CTAS.

Flexibility

- 12, 16, 24 and 32 port versions offered at different price levels.
- Conference scheduling administration handled through VT100 emulation.
- Offers the ability to schedule conferences in five difference languages.
- Port capacity upgrades provided by keycodes.

Cool Features

- Excellent audio quality & the ability to have 10 simultaneous meetings.
- Password protection feature optional on a call by call basis.
- Flexible chairperson & participant commands.
- Features include Mute/Unmute, Dial-out/Transfer/Return, Lock/Unlock, Roll Call, Entry/Exit Tones & Name Announcements.
- Same voice as Meridian Mail for North American English.
- Provides music back to first caller until second caller joins the bridge.

Platform Overview

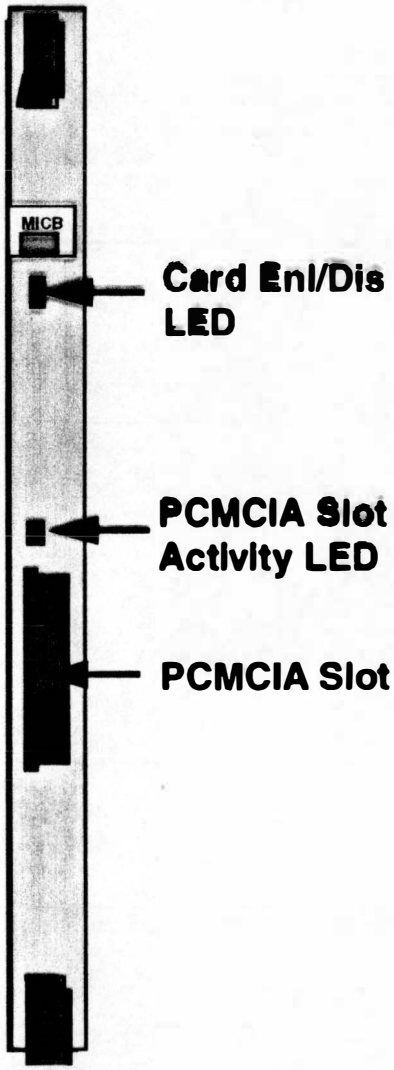

- Motorola Based Architecture (33MHz)
- pSOS+ Operating System
- 4MBytes of DRAM
- Onboard Motorola DSP firmware provides voice & tone services for up to 32 ports
- (1) 340 MB PCMCIA Hardrive is used to support MICB
- Up to 32 Built-In Digital Line Card Emulation Ports
- Ethernet Controller & Async. Transceivers for System Management

Orderable Sizes

- All configurations utilize same base hardware.
- Functionality is enabled by keycode on the card.

- 12 Conference Port MICB
- 16 Conference Port MICB
- 24 Conference Port MICB
  - RIs 22 or greater required
  - Uses Flexible Voice/Data TN feature
- 32 Conference Port MICB
  - RIs 22 or greater required
  - Uses Flexible Voice/Data TN feature

Upgrades & Expansion

- **Conference Port Capacity Upgrades**
  - 12 to 16, 12 to 24 & 12 to 32 port upgrades
  - 16 to 24 & 16 to 32 port upgrades
  - 24 to 32 port upgrade
  - Only a keycode is required (linked to card security I.D.)
  - Card security ID provided to Nortel, then keycode is faxed to distributor
  - Hard copy of keycode & invoice is also shipped to the distributor for billing and records storage.
  - Keycodes are entered via MICB VT100 terminal without any service disruption

MICB Intro Schedule

NORTEL
NORTHERN TELECOM

MICB Role-out

• Field Trial	Mar '97
• Soak	Mar '97
• In Price Books	Apr '97

System Management

MICB Supports Two Methods of Connection!

1) System Management via RS232/422

- 50 pin connector installed to M1 I/O panel.
- CRT or terminal emulation as PC or Mac is set-up as VT100.
- Two levels of System Management.
  - Admin level for configuration of system perimeters.
  - Operator level for scheduling and conference management.

2) System Management via Ethernet

- Allows multiple terminal access through IP address to a MICB.
- MAT 5 compatible.

- A new keycode will be required for each beam.
- WICB card
- Delivered via PCMCIA which can be loaded for multiple
- Enable new [illegible] hardware & applications
- New keycodes are not required
- It required will be delivered via PCMCIA card which can be used for multiple WICB cards
- Bid-fix up-[illegible] will be delivered via PCMCIA
- Software will [illegible] pre-loaded on PCMCIA card
- PCMCIA [illegible] for WICB
- PCMCIA card [illegible] & upgrades
- Five [illegible]
- Fall [illegible]
- English

MICB Internal Software

- **Software will come pre-loaded on PCMCIA drive**
  - PCMCIA hardrive is required for MICB.
  - PCMCIA drive contains MICB application & languages.
  - Five languages are provided, American English, French, Latin American Spanish, Brazilian Portuguese & UK English.
- **Bug-Fix Up-issues will be delivered on PCMCIA**
  - If required, will be delivered via PCMCIA card which can be reused for multiple MICB cards.
  - New keycodes are not required.
- **Future New MICB Features & Applications**
  - Delivered via PCMCIA which can be reused for multiple MICB cards.
  - A new keycode will be required for each pack.